LM25576 42V, 3A Step-Down Switching Regulator

1 Features

- Integrated 42V, 170mΩ N-channel MOSFET
- Ultra-wide input voltage range from 6V to 42V
- Adjustable output voltage as low as 1.225V
- 1.5% feedback reference accuracy
- Operating frequency adjustable between 50kHz and 1MHz with single resistor
- Controller or peripheral frequency synchronization
- Adjustable soft start
- Emulated current mode control architecture
- Wide bandwidth error amplifier
- Built-in protection
- HTSSOP-20EP (exposed pad)
- Create a custom design using the LM25576 with the WEBENCH® Power Designer

2 Applications

- Industrial

3 Description

The LM25576 is an easy to use buck regulator which allows design engineers to design and optimize a robust power supply using a minimum set of components. Operating with an input voltage range of 6V to 42V, the LM25576 delivers 3A of continuous output current with an integrated 170mΩ N-Channel MOSFET. The regulator uses an emulated current mode architecture which provides inherent line regulation, tight load transient response, and ease of loop compensation without the usual limitation of low-duty cycles associated with current mode regulators. The operating frequency is adjustable from 50kHz to 1MHz to allow optimization of size and efficiency. To reduce EMI, a frequency synchronization pin allows multiple ICs from the LM(2)557x family to self-synchronize or to synchronize to an external clock. The LM25576 makes sure of robustness with cycle-by-cycle current limit, short-circuit protection, thermal shutdown, and remote shutdown. The device is available in a power enhanced HTSSOP-20 package featuring an exposed die attach pad for thermal dissipation. The LM25576 is supported by the full suite of WEBENCH circuit design and selection simulation services online design tools.

Package Information

PART NUMBER	PACKAGE(1)	PACKAGE SIZE(1)
LM25576	PWP (HTSSOP, 20)	6.5mm × 4.4mm

(1) The package size (length × width) is a nominal value and includes pins, where applicable.

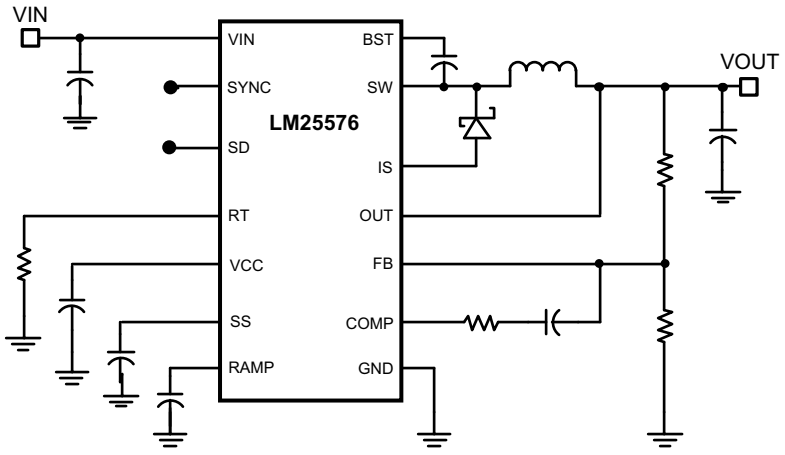

Simplified Application Schematic

An IMPORTANT NOTICE at the end of this data sheet addresses availability, warranty, changes, use in safety-critical applications, intellectual property matters and other important disclaimers. PRODUCTION DATA.

Table of Contents

1 Features....1
2 Applications....1
3 Description....1
4 Pin Configuration and Functions....3
5 Specifications....5
5.1 Absolute Maximum Ratings....5
5.2 ESD Ratings....5
5.3 Recommended Operating Conditions....5
5.4 Thermal Information....5
5.5 Electrical Characteristics....6
5.6 Typical Characteristics....8
6 Detailed Description....10
6.1 Overview....10
6.2 Functional Block Diagram....10
6.3 Feature Description....10
6.4 Device Functional Modes....11
7 Application and Implementation....17
7.1 Application Information....17
7.2 Typical Application....18
7.3 Power Supply Recommendations....24
7.4 Layout....25
8 Device and Documentation Support....28
8.1 Device Support....28
8.2 Documentation Support....28
8.3 Receiving Notification of Documentation Updates....28
8.4 Support Resources....28
8.5 Trademarks....28
8.6 Electrostatic Discharge Caution....28
8.7 Glossary....28
9 Revision History....29
10 Mechanical, Packaging, and Orderable Information....30

Copyright © 2025 Texas Instruments Incorporated

4 Pin Configuration and Functions

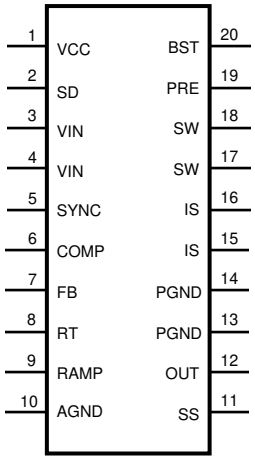

Figure 4-1. PWP 20-HTSSOP (Top View)

Table 4-1. Pin Functions

NO.	NAME	TYPE (1)	DESCRIPTION
1	VCC	O	Output of the bias regulator Vcc tracks Vin up to 9 V. Beyond 9 V, Vcc is regulated to 7 Volts. A 0.1 uF to 1 uF ceramic decoupling capacitor is required. An external voltage (7.5 V – 14 V) can be applied to this pin to reduce internal power dissipation.
2	SD	I	Shutdown or UVLO input If the SD pin voltage is below 0.7 V the regulator will be in a low power state. If the SD pin voltage is between 0.7 V and 1.225 V the regulator is in standby mode. If the SD pin voltage is above 1.225 V the regulator is operational. An external voltage divider can be used to set a line undervoltage shutdown threshold. If the SD pin is left open circuit, a 5 µA pullup current source configures the regulator fully operational.
3, 4	VIN	I	Input supply voltage Nominal operating range: 6 V to 42 V
5	SYNC	I	Oscillator synchronization input or output The internal oscillator can be synchronized to an external clock with an external pulldown device. Multiple LM25576 devices can be synchronized together by connection of the SYNC pins.
6	COMP		Output of the internal error amplifier The loop compensation network must be connected between this pin and the FB pin.
7	FB	I	Feedback signal from the regulated output This pin is connected to the inverting input of the internal error amplifier. The regulation threshold is 1.225 V.
8	RT	I	Internal oscillator frequency set input The internal oscillator is set with a single resistor, connected between this pin and the AGND pin.
9	RAMP	O	Ramp control signal An external capacitor connected between this pin and the AGND pin sets the ramp slope used for current mode control. Recommended capacitor range 50 pF to 2000 pF.
10	AGND	Ground	Analog ground Internal reference for the regulator control functions
11	SS	O	Soft start An external capacitor and an internal 10 µA current source set the time constant for the rise of the error amp reference. The SS pin is held low during standby, Vcc UVLO and thermal shutdown.
12	OUT	O	Output voltage connection Connect directly to the regulated output voltage.
13, 14	PGND	Ground	Power ground Low side reference for the PRE switch and the IS sense resistor.

Copyright © 2025 Texas Instruments Incorporated

Table 4-1. Pin Functions (continued)

NO.	NAME	TYPE (1)	DESCRIPTION
15, 16	IS	I	Current sense Current measurement connection for the re-circulating diode. An internal sense resistor and a sample/hold circuit sense the diode current near the conclusion of the off-time. This current measurement provides the DC level of the emulated current ramp.
17, 18	SW	O	Switching node The source terminal of the internal buck switch. The SW pin must be connected to the external Schottky diode and to the buck inductor.
19	PRE	I	Precharge assist for the bootstrap capacitor This open drain output can be connected to SW pin to aid charging the bootstrap capacitor during very light load conditions or in applications where the output can be precharged before the LM25576 is enabled. An internal precharge MOSFET is turned on for 265 ns each cycle just prior to the on-time interval of the buck switch.
20	BST	I	Boost input for bootstrap capacitor An external capacitor is required between the BST and the SW pins. A 0.022 µF ceramic capacitor is recommended. The capacitor is charged from Vcc through an internal diode during the off-time of the buck switch.
NA	EP	Ground	Exposed Pad Exposed metal pad on the underside of the device. TI recommends to connect this pad to the PWB ground plane to aid in heat dissipation.

(1) I = input, O = output

Copyright © 2025 Texas Instruments Incorporated

5 Specifications

5.1 Absolute Maximum Ratings

over operating free-air temperature range (unless otherwise noted)(1) (2)

	MIN	MAX	UNIT
V_{IN} to GND		45	V
BST to GND		60	V
PRE to GND		45	V
SW to GND (Steady State)		–1.5	V
BST to V_{CC}		45	V
SD, V_{CC} to GND		14	V
BST to SW		14	V
OUT to GND	Limited	Vin	V
SYNC, SS, FB, RAMP to GND		7	V
Storage temperature, T_{stg}	–65	150	°C

(1) Operation outside the Absolute Maximum Ratings may cause permanent device damage. Absolute Maximum Ratings do not imply functional operation of the device at these or any other conditions beyond those listed under Recommended Operating Conditions. If used outside the Recommended Operating Conditions but within the Absolute Maximum Ratings, the device may not be fully functional, and this may affect device reliability, functionality, performance, and shorten the device lifetime.
(2) If Military/Aerospace specified devices are required, please contact the Texas Instruments Sales Office/Distributors for availability and specifications.

5.2 ESD Ratings

			VALUE	UNIT
$V_{(ESD)}$	Electrostatic discharge(3)	Human body model (HBM), per ANSI/ESDA/JEDEC JS-001, all pins(1)	±2	kV
		Charged-device model (CDM), per JEDEC specification JESD22-C101(2)	±500	V

(1) JEDEC document JEP155 states that 500V HBM allows safe manufacturing with a standard ESD control process.
(2) JEDEC document JEP157 states that 250V CDM allows safe manufacturing with a standard ESD control process.
(3) The human-body model is a 100-pF capacitor discharged through a 1.5kΩ resistor into each pin.

5.3 Recommended Operating Conditions

	MIN	MAX	UNIT
V_{IN}	6	42	V
T_J Operation junction temperature	–40	125	°C

5.4 Thermal Information

THERMAL METRIC(1)		LM25576 PWP (HTSSOP) 20 PINS	UNIT
$R_{\theta JA}$	Junction-to-ambient thermal resistance	40	°C/W
$R_{\theta JC(top)}$	Junction-to-case (top) thermal resistance	33.6	°C/W
$R_{\theta JB}$	Junction-to-board thermal resistance	6.9	°C/W
Ψ_{JT}	Junction-to-top characterization parameter	1.3	°C/W
Ψ_{JB}	Junction-to-board characterization parameter	14.8	°C/W

(1) For more information about traditional and new thermal metrics, see the *Semiconductor and IC Package Thermal Metrics* application note

Copyright © 2025 Texas Instruments Incorporated

5.5 Electrical Characteristics

Typical values correspond to T_J = 25°C, V_{IN} = 24 V, R_T = 32.4kΩ. Minimum and maximum limits apply over –40°C to 125°C junction temperature range unless otherwise stated.(1)

PARAMETER		TEST CONDITIONS	MIN	TYP	MAX	UNIT
STARTUP REGULATOR						
V_{CC} Reg	V_{CC} Regulator Output		6.85	7.15	7.45	V
	V_{CC} LDO Mode turn-off			9		V
	V_{CC} Current Limit	V_{CC} = 0 V,		25		mA
VCC SUPPLY						
	V_{CC} UVLO Threshold	VCC Increasing	5.03	5.35	5.67	V
	V_{CC} Undervoltage Hysteresis			0.25		V
	Bias Current (Iin)	FB = 1.3 V.		2	4.5	mA
	Shutdown Current (Iin)	SD = 0 V.		48	85	µA
SHUTDOWN THRESHOLDS						
	Shutdown Threshold		0.47	0.7	0.9	V
	Shutdown Hysteresis			0.1		V
	Standby Threshold		1.17	1.225	1.28	V
	Standby Hysteresis			0.1		V
	SD Pull-up Current Source			5		µA
SWITCH CHARACTERISTICS						
	Buck Switch Rds(on)			170	340	mΩ
	BOOST UVLO			3.8		V
	BOOST UVLO Hysteresis			0.8		V
	Pre-charge Switch Rds(on)			70		Ω
	Pre-charge Switch on-time			265		ns
CURRENT LIMIT						
	Cycle by Cycle Current Limit Delay	RAMP = 2.5 V.		75		ns
SOFT-START						
	SS Current Source		7	10	14	µA
OSCILLATOR						
	Frequency1		180	200	220	kHz
	Frequency2	R_T = 11 kΩ.	425	485	545	kHz
	SYNC Source Impedance			11		kΩ
	SYNC Sink Impedance			110		Ω
	SYNC Threshold (falling)			1.4		V
	SYNC Frequency	R_T = 11 kΩ.	550			kHz
	SYNC Pulse Width Minimum		15			ns
RAMP GENERATOR						
	Ramp Current 1	V_{IN} = 36 V, V_{OUT} = 10 V.	136	160	184	µA
	Ramp Current 2	V_{IN} = 10 V, V_{OUT} = 10 V.	18	25	32	µA
PWM COMPARATOR						
	Forced Off-time		416	500	575	ns
	Min On-time			80		ns
	COMP to PWM Comparator Offset			0.7		V
ERROR AMPLIFIER						
	Feedback Voltage	Vfb = COMP.	1.207	1.225	1.243	µV
	FB Bias Current			10		nA
	DC Gain			70		dB
	COMP Sink / Source Current		3			mA
	Unity Gain Bandwidth			3		MHz
DIODE SENSE RESISTANCE						

Copyright © 2025 Texas Instruments Incorporated

5.5 Electrical Characteristics (continued)

Typical values correspond to T_J = 25°C, V_{IN} = 24 V, R_T = 32.4kΩ. Minimum and maximum limits apply over –40°C to 125°C junction temperature range unless otherwise stated.(1)

PARAMETER		TEST CONDITIONS	MIN	TYP	MAX	UNIT
D_{SENSE}				42		mΩ
THERMAL SHUTDOWN						
Tsd	Thermal Shutdown Threshold			165		°C
Tsd_hys	Thermal Shutdown hysteresis			25		°C

(1) Min and Max limits are 100% production tested at 25°C. Limits over the operating temperature range are ensured through correlation using Statistical Quality Control (SQC) methods. Limits are used to calculate Texas Instruments' Average Outgoing Quality Level (AOQL).

Copyright © 2025 Texas Instruments Incorporated

5.6 Typical Characteristics

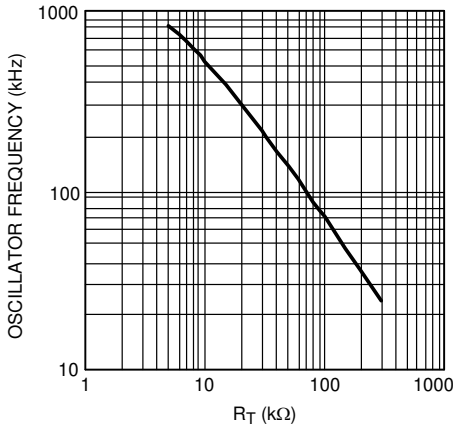

Figure 5-1. Oscillator Frequency vs R_T

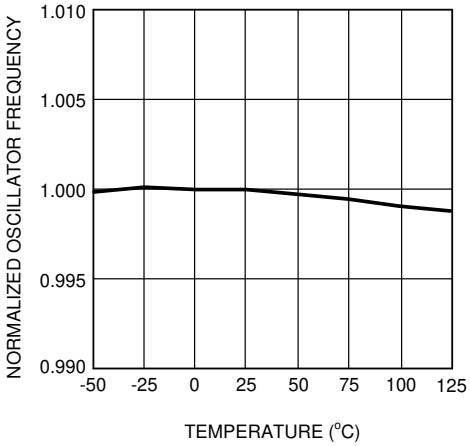

F_{OSC} = 200kHz

Figure 5-2. Oscillator Frequency vs Temperature

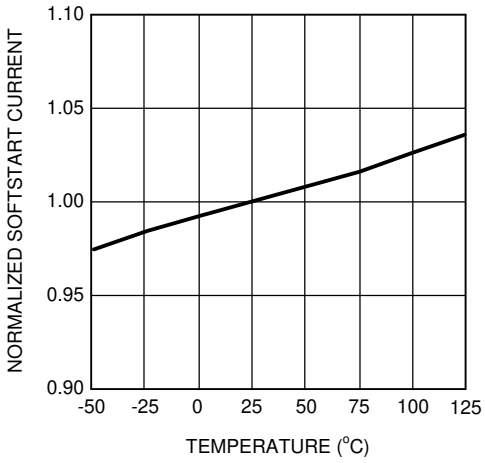

Figure 5-3. Soft Start Current vs Temperature

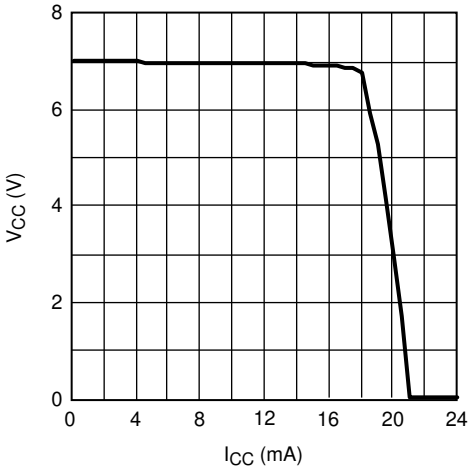

V_{IN} = 12V

Figure 5-4. V_{CC} vs I_{CC}

Copyright © 2025 Texas Instruments Incorporated

5.6 Typical Characteristics (continued)

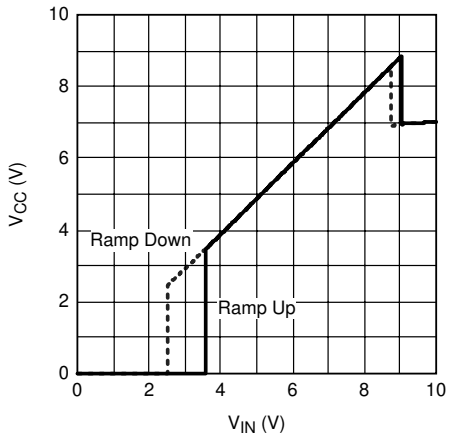

R_L = 7 kΩ

Figure 5-5. V_{CC} vs V_{IN}

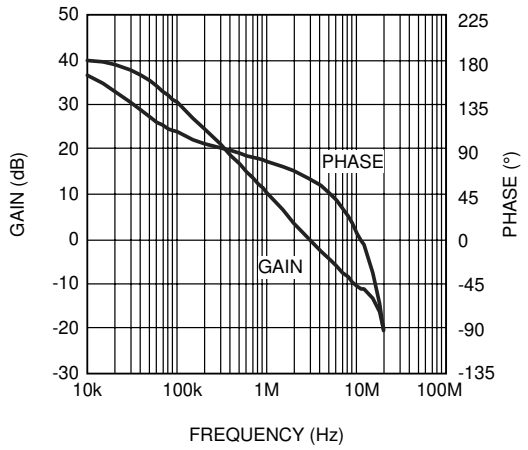

A_{VCL} = 101

Figure 5-6. Error Amplifier Gain and Phase

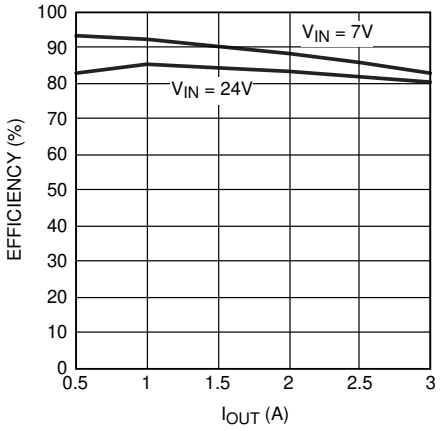

Figure 5-7. Demoboard Efficiency vs I_{OUT} and V_{IN}

Copyright © 2025 Texas Instruments Incorporated

6 Detailed Description

6.1 Overview

The LM25576 switching regulator features all of the functions necessary to implement an efficient high voltage buck regulator using a minimum of external components. This easy to use regulator integrates a 42 V N-Channel buck switch with an output current capability of 3 Amps. The regulator control method is based on current mode control utilizing an emulated current ramp. Peak current mode control provides inherent line voltage feed-forward, cycle-by-cycle current limiting, and ease of loop compensation. The use of an emulated control ramp reduces noise sensitivity of the pulse-width modulation circuit, allowing reliable processing of very small duty cycles necessary in high input voltage applications. The operating frequency is user programmable from 50 kHz to 1 MHz. An oscillator synchronization pin allows multiple LM25576 regulators to self synchronize or be synchronized to an external clock. The output voltage can be set as low as 1.225 V. Fault protection features include, current limiting, thermal shutdown and remote shutdown capability. The device is available in the HTSSOP-20 package featuring an exposed pad to aid thermal dissipation.

The functional block diagram and typical application of the LM25576 are shown in *Functional Block Diagram*. The LM25576 can be applied in numerous applications to efficiently step-down a high, unregulated input voltage. The device is well designed for telecom, industrial power bus voltage ranges.

6.2 Functional Block Diagram

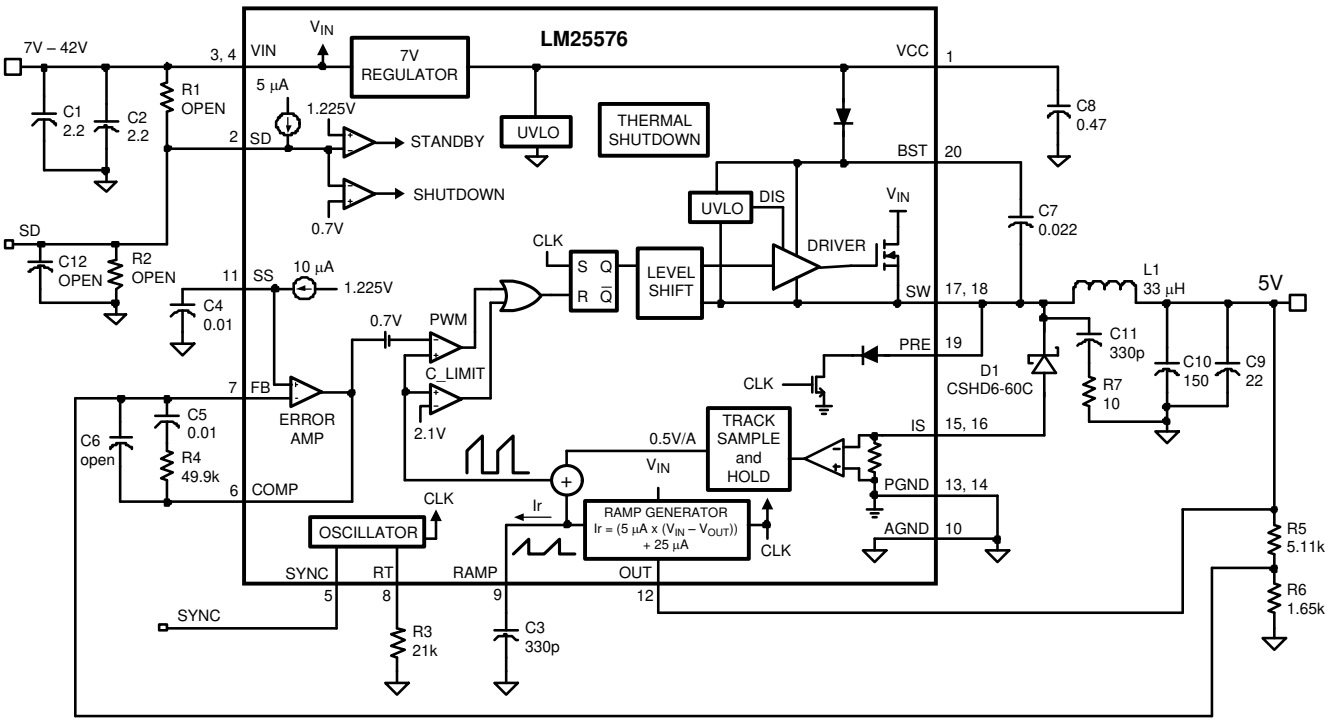

6.3 Feature Description

6.3.1 High Voltage Start-Up Regulator

The LM25576 contains a dual-mode internal high voltage start-up regulator that provides the Vcc bias supply for the PWM controller and boot-strap MOSFET gate driver. The input pin (VIN) can be connected directly to the input voltage, as high as 42 Volts. For input voltages below 9 V, a low dropout switch connects Vcc directly to Vin. In this supply range, Vcc is approximately equal to Vin. For Vin voltage greater than 9 V, the low dropout switch is disabled and the Vcc regulator is enabled to maintain Vcc at approximately 7 V. The wide operating range of 6 V to 42 V is achieved through the use of this dual mode regulator.

The output of the Vcc regulator is current limited to 25 mA. Upon power up, the regulator sources current into the capacitor connected to the VCC pin. When the voltage at the VCC pin exceeds the Vcc UVLO threshold of 5.35

Copyright © 2025 Texas Instruments Incorporated

V and the SD pin is greater than 1.225 V, the output switch is enabled and a soft-start sequence begins. The output switch remains enabled until Vcc falls below 5 V or the SD pin falls below 1.125 V.

An auxiliary supply voltage can be applied to the VCC pin to reduce the IC power dissipation. If the auxiliary voltage is greater than 7.3 V, the internal regulator essentially shuts off, reducing the IC power dissipation. The Vcc regulator series pass transistor includes a diode between Vcc and Vin that must not be forward biased in normal operation. Therefore, the auxiliary Vcc voltage must never exceed the Vin voltage.

In high voltage applications, extra care must be taken to make sure the VIN pin does not exceed the absolute maximum voltage rating of 45 V. During line or load transients, voltage ringing on the Vin line that exceeds the Absolute Maximum Ratings can damage the IC. Both careful PC board layout and the use of quality bypass capacitors located close to the VIN and GND pins are essential.

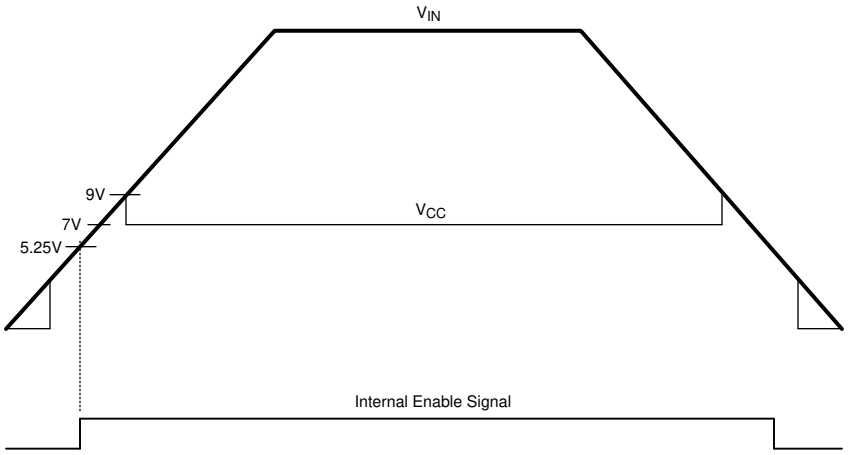

Figure 6-1. Vin and Vcc Sequencing

6.4 Device Functional Modes

6.4.1 Shutdown and Stand-by Mode

The LM25575 contains a dual level Shutdown (SD) circuit. When the SD pin voltage is below 0.7 V, the regulator is in a low current shutdown mode. When the SD pin voltage is greater than 0.7 V but less than 1.225 V, the regulator is in standby mode. In standby mode the Vcc regulator is active but the output switch is disabled. When the SD pin voltage exceeds 1.225 V, the output switch is enabled and normal operation begins. An internal 5 µA pullup current source configures the regulator to be fully operational if the SD pin is left open.

An external set-point voltage divider from VIN to GND can be used to set the operational input range of the regulator. The divider must be designed such that the voltage at the SD pin is greater than 1.225 V when Vin is in the desired operating range. The internal 5 µA pullup current source must be included in calculations of the external set-point divider. Hysteresis of 0.1 V is included for both the shutdown and standby thresholds. The SD pin is internally clamped with a 1 kΩ resistor and an 8 V zener clamp. The voltage at the SD pin must never exceed 14 V. If the voltage at the SD pin exceeds 8 V, the bias current increases at a rate of 1 mA/V.

The SD pin can also be used to implement various remote enable and disable functions. Pulling the SD pin below the 0.7 V threshold totally disables the controller. If the SD pin voltage is above 1.225 V the regulator is operational.

6.4.2 Oscillator and Sync Capability

The LM25576 oscillator frequency is set by a single external resistor connected between the RT pin and the AGND pin. The R_T resistor must be located very close to the device and connected directly to the pins of the IC (RT and AGND).To set a desired oscillator frequency (F), the necessary value for the R_T resistor can be calculated from the following equation:

Copyright © 2025 Texas Instruments Incorporated

$$R_T = \frac{\frac{1}{F} - 580 \times 10^{-9}}{135 \times 10^{-12}} \quad (1)$$

The SYNC pin can be used to synchronize the internal oscillator to an external clock. The external clock must be of higher frequency than the free-running frequency set by the R_T resistor. A clock circuit with an open drain output is the recommended interface from the external clock to the SYNC pin. The clock pulse duration must be greater than 15 ns.

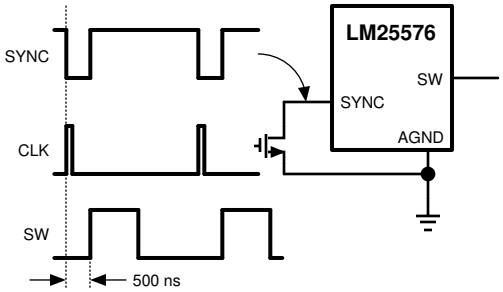

Figure 6-2. Sync from External Clock

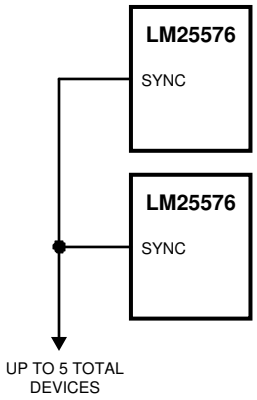

Figure 6-3. Sync from Multiple Devices

Multiple LM25576 devices can be synchronized together simply by connecting the SYNC pins together. In this configuration, all of the devices are synchronized to the highest frequency device. The diagram in Figure 6-4 illustrates the SYNC input and output features of the LM25576. The internal oscillator circuit drives the SYNC pin with a strong pull-down and weak pull-up inverter. When the SYNC pin is pulled low either by the internal oscillator or an external clock, the ramp cycle of the oscillator is terminated and a new oscillator cycle begins. Thus, if the SYNC pins of several LM25576 ICs are connected together, the IC with the highest internal clock frequency pulls the connected SYNC pins low first and terminates the oscillator ramp cycles of the other ICs. The LM25576 with the highest programmed clock frequency serves as the controller and control the switching frequency of the all the devices with lower oscillator frequency.

Copyright © 2025 Texas Instruments Incorporated

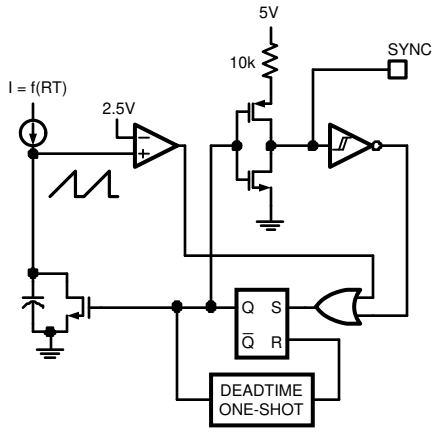

Figure 6-4. Simplified Oscillator Block Diagram and SYNC I/O Circuit

6.4.3 Error Amplifier and PWM Comparator

The internal high gain error amplifier generates an error signal proportional to the difference between the regulated output voltage and an internal precision reference (1.225 V). The output of the error amplifier is connected to the COMP pin allowing the user to provide loop compensation components, generally a type II network, as illustrated in *functional Block Diagram*. This network creates a pole at DC, a zero and a noise reducing high frequency pole. The PWM comparator compares the emulated current sense signal from the RAMP generator to the error amplifier output voltage at the COMP pin.

6.4.4 RAMP Generator

The ramp signal used in the pulse width modulator for current mode control is typically derived directly from the buck switch current. This switch current corresponds to the positive slope portion of the output inductor current. Using this signal for the PWM ramp simplifies the control loop transfer function to a single pole response and provides inherent input voltage feed-forward compensation. The disadvantage of using the buck switch current signal for PWM control is the large leading edge spike due to circuit parasitics that must be filtered or blanked. Also, the current measurement can introduce significant propagation delays. The filtering, blanking time and propagation delay limit the minimum achievable pulse width. In applications where the input voltage can be relatively large in comparison to the output voltage, controlling small pulse widths and duty cycles is necessary for regulation. The LM25576 utilizes a unique ramp generator, which does not actually measure the buck switch current but rather reconstructs the signal. Reconstructing or emulating the inductor current provides a ramp signal to the PWM comparator that is free of leading edge spikes and measurement or filtering delays. The current reconstruction is comprised of two elements; a sample and hold DC level and an emulated current ramp.

Copyright © 2025 Texas Instruments Incorporated

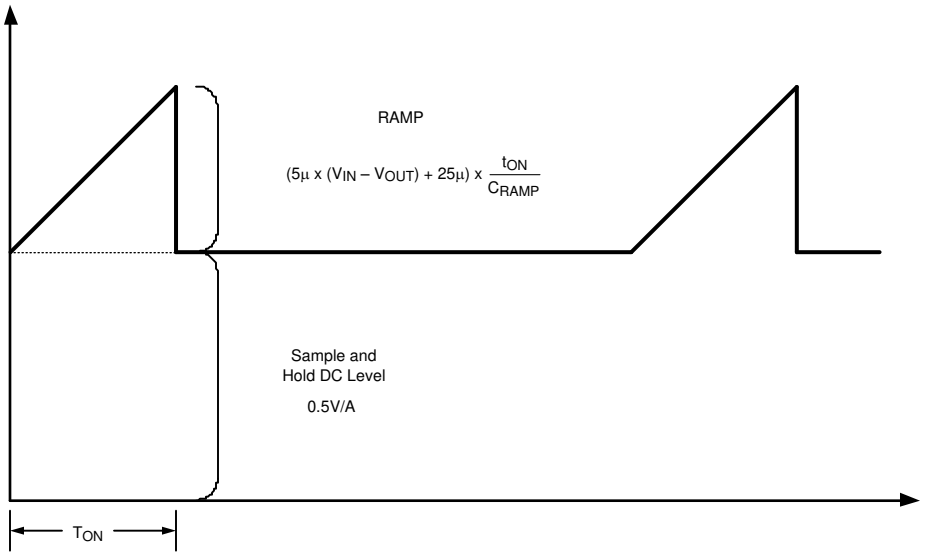

Figure 6-5. Composition of Current Sense Signal

The sample and hold DC level illustrated in Figure 6-5 is derived from a measurement of the re-circulating Schottky diode anode current. The re-circulating diode anode must be connected to the IS pin. The diode current flows through an internal current sense resistor between the IS and PGND pins. The voltage level across the sense resistor is sampled and held just prior to the onset of the next conduction interval of the buck switch. The diode current sensing and sample & hold provide the DC level of the reconstructed current signal. The positive slope inductor current ramp is emulated by an external capacitor connected from the RAMP pin to AGND and an internal voltage controlled current source. The ramp current source that emulates the inductor current is a function of the Vin and Vout voltages per the following equation:

$$I_{RAMP} = (5\mu \times (Vin - Vout)) + 25\mu A \quad (2)$$

Proper selection of the RAMP capacitor depends upon the selected value of the output inductor. The value of C_{RAMP} can be selected from: $C_{RAMP} = L \times 10^{-5}$, where L is the value of the output inductor in Henrys. With this value, the scale factor of the emulated current ramp is approximately equal to the scale factor of the DC level sample and hold (0.5 V / A). The C_{RAMP} capacitor must be located very close to the device and connected directly to the pins of the IC (RAMP and AGND).

For duty cycles greater than 50%, peak current mode control circuits are subject to sub-harmonic oscillation. Sub-harmonic oscillation is normally characterized by observing alternating wide and narrow pulses at the switch node. Adding a fixed slope voltage ramp (slope compensation) to the current sense signal prevents this oscillation. The 25 µA of offset current provided from the emulated current source adds some fixed slope to the ramp signal. In some high output voltage, high duty cycle applications, additional slope can be required. In these applications, a pull-up resistor can be added between the V_{CC} and RAMP pins to increase the ramp slope compensation.

For V_{OUT} > 7.5V:

Calculate optimal slope current, $I_{OS} = V_{OUT} \times 5\mu A/V$.

For example, at V_{OUT} = 10V, I_{OS} = 50µA.

Install a resistor from the RAMP pin to V_{CC}:

$R_{RAMP} = V_{CC} / (I_{OS} – 25\mu A)$

Copyright © 2025 Texas Instruments Incorporated

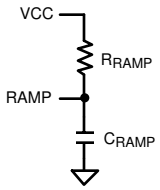

Figure 6-6. R_{RAMP} to V_{CC} for V_{OUT} > 7.5V

6.4.5 Maximum Duty Cycle and Input Drop-Out Voltage

There is a forced off-time of 500 ns implemented each cycle to make sure of sufficient time for the diode current to be sampled. This forced off-time limits the maximum duty cycle of the buck switch. The maximum duty cycle varies with the operating frequency.

$$D_{MAX} = 1 – Fs \times 500ns \quad (3)$$

Where Fs is the oscillator frequency. Limiting the maximum duty cycle raises the input dropout voltage. The input dropout voltage is the lowest input voltage required to maintain regulation of the output voltage. An approximation of the input dropout voltage is:

$$Vin_{MIN} = \frac{Vout + V_D}{1 - Fs \times 500\ ns} \quad (4)$$

Where V_D is the voltage drop across the re-circulatory diode. Operating at high switching frequency raises the minimum input voltage necessary to maintain regulation.

6.4.6 Current Limit

The LM25576 contains a unique current monitoring scheme for control and over-current protection. When set correctly, the emulated current sense signal provides a signal which is proportional to the buck switch current with a scale factor of 0.5 V / A. The emulated ramp signal is applied to the current limit comparator. If the emulated ramp signal exceeds 2.1 V (4.2A) the present current cycle is terminated (cycle-by-cycle current limiting). In applications with small output inductance and high input voltage the switch current can overshoot due to the propagation delay of the current limit comparator. If an overshoot must occur, the diode current sampling circuit detects the excess inductor current during the off-time of the buck switch. If the sample and hold DC level exceeds the 2.1 V current limit threshold, the buck switch is disabled and skip pulses until the diode current sampling circuit detects the inductor current has decayed below the current limit threshold. This approach prevents current runaway conditions due to propagation delays or inductor saturation since the inductor current is forced to decay following any current overshoot.

6.4.7 Soft Start

The soft-start feature allows the regulator to gradually reach the initial steady state operating point, thus reducing start-up stresses and surges. The internal soft-start current source, set to 10 µA, gradually increases the voltage of an external soft-start capacitor connected to the SS pin. The soft-start capacitor voltage is connected to the reference input of the error amplifier. Various sequencing and tracking schemes can be implemented using external circuits that limit or clamp the voltage level of the SS pin.

In the event a fault is detected (overtemperature, Vcc UVLO, SD) the soft-start capacitor is discharged. When the fault condition is no longer present, a new soft-start sequence commences.

6.4.8 Boost Pin

The LM25576 integrates an N-Channel buck switch and associated floating high voltage level shift / gate driver. This gate driver circuit works in conjunction with an internal diode and an external bootstrap capacitor. A 0.022 µF ceramic capacitor, connected with short traces between the BST pin and SW pin, is recommended. During the off-time of the buck switch, the SW pin voltage is approximately –0.5 V and the bootstrap capacitor is

Copyright © 2025 Texas Instruments Incorporated

charged from Vcc through the internal bootstrap diode. When operating with a high PWM duty cycle, the buck switch is forced off each cycle for 500 ns to make sure that the bootstrap capacitor is recharged.

Under very light load conditions or when the output voltage is precharged, the SW voltage does not remain low during the off-time of the buck switch. If the inductor current falls to zero and the SW pin rises, the bootstrap capacitor does not receive sufficient voltage to operate the buck switch gate driver. For these applications, the PRE pin can be connected to the SW pin to pre-charge the bootstrap capacitor. The internal precharge MOSFET and diode connected between the PRE pin and PGND turns on each cycle for 265 ns just prior to the onset of a new switching cycle. If the SW pin is at a normal negative voltage level (continuous conduction mode), then no current flows through the precharge MOSFET/diode.

6.4.9 Thermal Protection

Internal Thermal Shutdown circuitry is provided to protect the integrated circuit in the event the maximum junction temperature is exceeded. When activated, typically at 165°C, the controller is forced into a low power reset state, disabling the output driver and the bias regulator. This feature is provided to prevent catastrophic failures from accidental device overheating.

Copyright © 2025 Texas Instruments Incorporated

7 Application and Implementation

Note

Information in the following applications sections is not part of the TI component specification, and TI does not warrant its accuracy or completeness. TI's customers are responsible for determining suitability of components for their purposes, as well as validating and testing their design implementation to confirm system functionality.

7.1 Application Information

7.1.1 Bias Power Dissipation Reduction

Buck regulators operating with high input voltage can dissipate an appreciable amount of power for the bias of the IC. The V_{CC} regulator must step-down the input voltage V_{IN} to a nominal V_{CC} level of 7 V. The large voltage drop across the V_{CC} regulator translates into a large power dissipation within the Vcc regulator. There are several techniques that can significantly reduce this bias regulator power dissipation. Figure 7-1 and Figure 7-2 depict two methods to bias the IC from the output voltage. In each case the internal Vcc regulator is used to initially bias the VCC pin. After the output voltage is established, the VCC pin potential is raised above the nominal 7 V regulation level, which effectively disables the internal V_{CC} regulator. The voltage applied to the VCC pin must never exceed 14 V. The V_{CC} voltage must never be larger than the V_{IN} voltage.

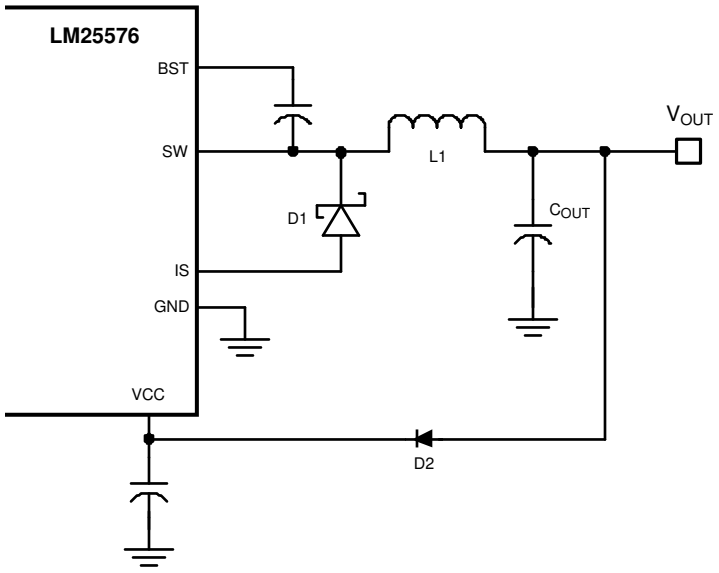

Figure 7-1. VCC Bias from VOUT for 8 V < VOUT < 14 V

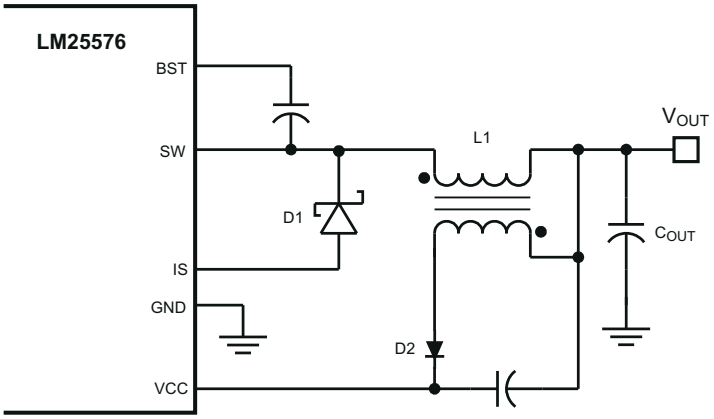

Figure 7-2. VCC Bias with Additional Winding on the Output Inductor

7.2 Typical Application

7.2.1 Typical Schematic for High Frequency (1 MHz) Application

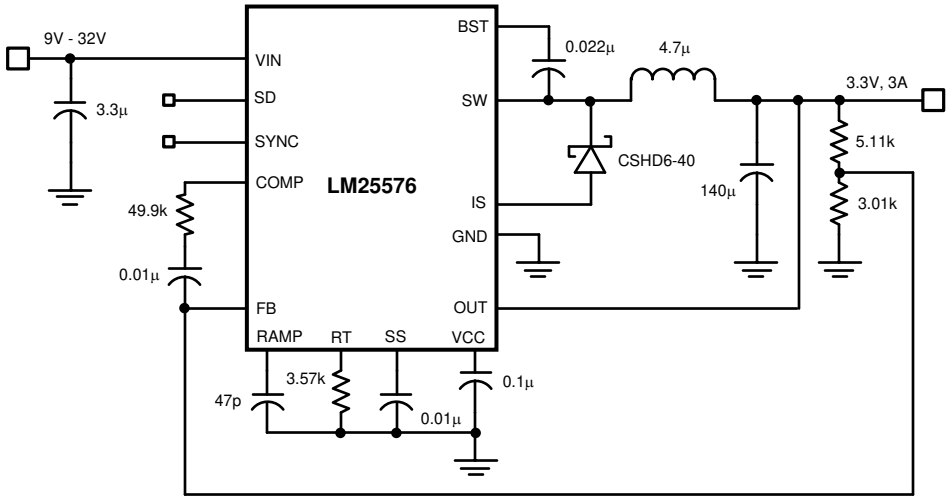

Figure 7-3. Schematic 3.3 V, 3 A, 1 MHz

7.2.2 Typical Schematic for Buck and Boost (Inverting) Application

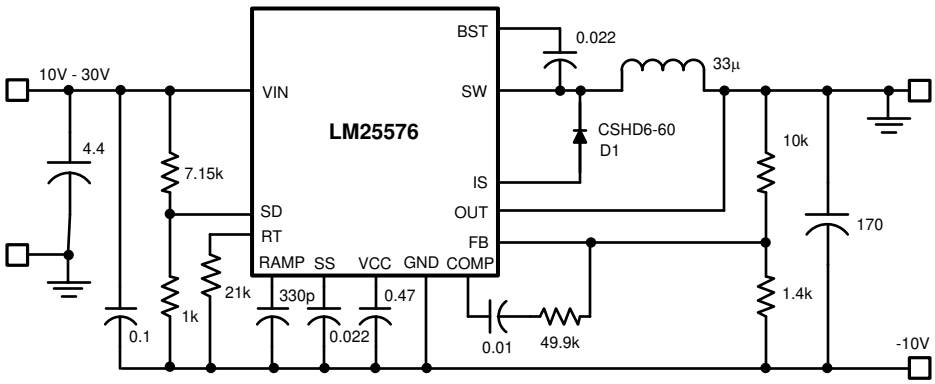

Copyright © 2025 Texas Instruments Incorporated

7.2.3 Design Requirements

The procedure for calculating the external components is illustrated with the following design example. The Bill of Materials for this design is listed in Table 7-1. The circuit shown in *Section 6.2* is configured for the following specifications:

- V_{OUT} = 5 V
- V_{IN} = 7 V to 42 V
- Fs = 300 kHz
- Minimum load current (for CCM) = 250 mA
- Maximum load current = 3 A

7.2.3.1 R3 (R_T)

R_T sets the oscillator switching frequency. Generally, higher frequency applications are smaller but have higher losses. Operation at 300 kHz was selected for this example as a reasonable compromise for both small size and high efficiency. The value of R_T for 300 kHz switching frequency can be calculated as follows:

$$R_T = \frac{[(1 / 300 \times 10^3) - 580 \times 10^{-9}]}{135 \times 10^{-12}} \quad (5)$$

The nearest standard value of 21 kΩ was chosen for R_T.

7.2.3.2 L1

The inductor value is determined based on the operating frequency, load current, ripple current, and the minimum and maximum input voltage ($V_{IN(min)}$, $V_{IN(max)}$).

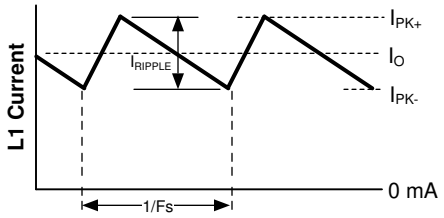

Figure 7-4. Inductor Current Waveform

To keep the circuit in continuous conduction mode (CCM), the maximum ripple current I_{RIPPLE} must be less than twice the minimum load current, or 0.5 Ap-p. Using this value of ripple current, the value of inductor (L1) is calculated using the following:

$$L1 = \frac{V_{OUT} \times (V_{IN(max)} - V_{OUT})}{I_{RIPPLE} \times F_S \times V_{IN(max)}} \quad (6)$$

$$L1 = \frac{5V \times (42V - 5V)}{0.5A \times 300\ kHz \times 42V} = 29\ \mu H \quad (7)$$

This procedure provides a guide to select the value of L1. The nearest standard value (33 µH) is used. L1 must be rated for the peak current (I_{PK+}) to prevent saturation. During normal loading conditions, the peak current occurs at maximum load current plus maximum ripple. During an overload condition the peak current is limited to 4.2 A nominal (5.1 A maximum). The selected inductor (see Table 7-1) has a conservative 6.2 Amp saturation current rating. For this manufacturer, the saturation rating is defined as the current necessary for the inductance to reduce by 30%, at 20°C.

7.2.3.3 C3 (C_{RAMP})

With the inductor value selected, the value of C3 (C_{RAMP}) necessary for the emulation ramp circuit is:

Copyright © 2025 Texas Instruments Incorporated

$$C_{RAMP} = L \times 10^{-5} \quad (8)$$

Where L is in Henrys

With L1 selected for 33 µH the recommended value for C3 is 330 pF.

7.2.3.4 C9, C10

The output capacitors, C9 and C10, smooth the inductor ripple current and provide a source of charge for transient loading conditions. For this design a 22 µF ceramic capacitor and a 150 µF SP organic capacitor were selected. The ceramic capacitor provides ultra low ESR to reduce the output ripple voltage and noise spikes, while the SP capacitor provides a large bulk capacitance in a small volume for transient loading conditions. An approximation for the output ripple voltage is:

$$\Delta V_{OUT} = \Delta I_L \times \left(ESR + \frac{1}{8 \times F_S \times C_{OUT}} \right) \quad (9)$$

7.2.3.5 D1

A Schottky type re-circulating diode is required for all LM25576 applications. Ultra-fast diodes are not recommended and can result in damage to the IC due to reverse recovery current transients. The near ideal reverse recovery characteristics and low forward voltage drop are particularly important diode characteristics for high input voltage and low output voltage applications common to the LM25576. The reverse recovery characteristic determines how long the current surge lasts each cycle when the buck switch is turned on. The reverse recovery characteristics of Schottky diodes minimize the peak instantaneous power in the buck switch occurring during turn-on each cycle. The resulting switching losses of the buck switch are significantly reduced when using a Schottky diode. The reverse breakdown rating must be selected for the maximum V_{IN}, plus some safety margin.

The forward voltage drop has a significant impact on the conversion efficiency, especially for applications with a low output voltage. “Rated” current for diodes vary widely from various manufacturers. The worst case is to assume a short-circuit load condition. In this case, the diode carries the output current almost continuously. For the LM25576, this current can be as high as 4.2 A. Assuming a worst case 1 V drop across the diode, the maximum diode power dissipation can be as high as 4.2 W. For the reference design, a 60 V Schottky in a DPAK package is selected.

7.2.3.6 C1, C2

The regulator supply voltage has a large source impedance at the switching frequency. Good quality input capacitors are necessary to limit the ripple voltage at the VIN pin while supplying most of the switch current during the on-time. When the buck switch turns on, the current into the VIN pin steps to the lower peak of the inductor current waveform, ramps up to the peak value, then drops to zero at turn-off. The average current into VIN during the on-time is the load current. The input capacitance must be selected for RMS current rating and minimum ripple voltage. A good approximation for the required ripple current rating necessary is $I_{RMS} > I_{OUT} / 2$.

Quality ceramic capacitors with a low ESR must be selected for the input filter. To allow for capacitor tolerances and voltage effects, two 2.2 µF, 100 V ceramic capacitors are used. If step input voltage transients are expected near the maximum rating of the LM25576, a careful evaluation of ringing and possible spikes at the device VIN pin must be completed. An additional damping network or input voltage clamp can be required in these cases.

7.2.3.7 C8

The capacitor at the VCC pin provides noise filtering and stability for the V_{CC} regulator. The recommended value of C8 must be no smaller than 0.1 µF, and must be a good quality, low ESR, ceramic capacitor. A value of 0.47 µF was selected for this design.

Copyright © 2025 Texas Instruments Incorporated

7.2.3.8 C7

The bootstrap capacitor between the BST and the SW pins supplies the gate current to charge the buck switch gate at turn-on. The recommended value of C7 is 0.022 µF, and must be a good quality, low ESR, ceramic capacitor.

7.2.3.9 C4

The capacitor at the SS pin determines the soft-start time, that is the time for the reference voltage and the output voltage, to reach the final regulated value. The time is determined from:

$$t_{ss} = \frac{C4 \times 1.225V}{10\ \mu A} \tag{10}$$

For this application, a C4 value of 0.01 µF was chosen which corresponds to a soft-start time of 1 ms.

7.2.3.10 R5, R6

R5 and R6 set the output voltage level, the ratio of these resistors is calculated from:

$$R5/R6 = (V_{OUT} / 1.225V) - 1 \tag{11}$$

For a 5 V output, the R5 and R6 ratio calculates to 3.082. The resistors must be chosen from standard value resistors, a good starting point is selection in the range of 1 kΩ - 10 kΩ. Values of 5.11 kΩ for R5, and 1.65 kΩ for R6 were selected.

7.2.3.11 R1, R2, C12

A voltage divider can be connected to the SD pin to set a minimum operating voltage $Vin_{(min)}$ for the regulator. If this feature is required, the easiest approach to select the divider resistor values is to select a value for R1 (between 10 kΩ and 100 kΩ recommended) then calculate R2 from:

$$R2 = 1.225 \times \left(\frac{R1}{V_{IN(min)} + (5 \times 10^{-6} \times R1) - 1.225} \right) \tag{12}$$

Capacitor C12 provides filtering for the divider. The voltage at the SD pin must never exceed 8 V, when using an external set-point divider, clamping the SD pin at high input voltage conditions can be necessary. The reference design uses the full range of the LM25576 (6 V to 42 V); therefore, these components can be omitted. With the SD pin open circuit, the LM25576 responds after the Vcc UVLO threshold is satisfied.

7.2.3.12 R7, C11

A snubber network across the power diode reduces ringing and spikes at the switching node. Excessive ringing and spikes can cause erratic operation and couple spikes and noise to the output. Voltage spikes beyond the rating of the LM25576 or the re-circulating diode can damage these devices. Selecting the values for the snubber is best accomplished through empirical methods. First, make sure the lead lengths for the snubber connections are very short. For the current levels typical for the LM25576 a resistor value between 5 and 20 Ohms is adequate. Increasing the value of the snubber capacitor results in more damping but higher losses. Select a minimum value of C11 that provides adequate damping of the SW pin waveform at high load.

7.2.3.13 R4, C5, C6

These components configure the error amplifier gain characteristics to accomplish a stable overall loop gain. One advantage of current mode control is the ability to close the loop with only two feedback components, R4 and C5. The overall loop gain is the product of the modulator gain and the error amplifier gain. The DC modulator gain of the LM25576 is as follows:

$$DC\ Gain_{(MOD)} = G_{m(MOD)} \times R_{LOAD} = 2 \times R_{LOAD} \tag{13}$$

Copyright © 2025 Texas Instruments Incorporated

The dominant low frequency pole of the modulator is determined by the load resistance (R_{LOAD},) and output capacitance (C_{OUT}). The corner frequency of this pole is:

$$f_{p(MOD)} = 1 / (2\pi R_{LOAD} C_{OUT}) \quad (14)$$

For R_{LOAD} = 5Ω and C_{OUT} = 177µF then $f_{p(MOD)}$ = 180Hz

DC $Gain_{(MOD)}$ = 2 x 5 = 10 = 20dB

For the design example of *Functional Block Diagram* the following modulator gain vs. frequency characteristic was measured as shown in Figure 7-5.

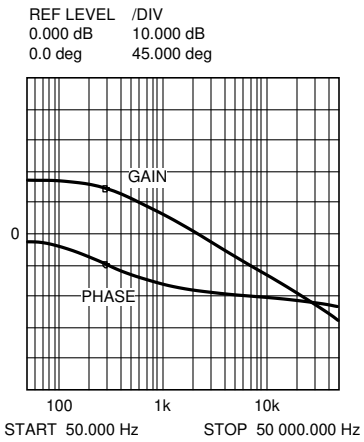

Figure 7-5. Gain and Phase of Modulator R_{LOAD} = 5 Ohms and C_{OUT} = 177µF

Components R4 and C5 configure the error amplifier as a type II configuration which has a pole at DC and a zero at f_Z = 1 / (2πR4C5). The error amplifier zero cancels the modulator pole leaving a single pole response at the crossover frequency of the loop gain. A single pole response at the crossover frequency yields a very stable loop with 90 degrees of phase margin.

For the design example, a target loop bandwidth (crossover frequency) of 20 kHz was selected. The compensation network zero (f_Z) must be selected at least an order of magnitude less than the target crossover frequency. This constrains the product of R4 and C5 for a desired compensation network zero 1 / (2π R4 C5) to be less than 2 kHz. Increasing R4, while proportionally decreasing C5, increases the error amp gain. Conversely, decreasing R4 while proportionally increasing C5, decreases the error amp gain. For the design example C5 was selected for 0.01 µF and R4 was selected for 49.9 kΩ. These values configure the compensation network zero at 320 Hz. The error amp gain at frequencies greater than f_Z is: R4 / R5, which is approximately 10 (20dB).

Copyright © 2025 Texas Instruments Incorporated

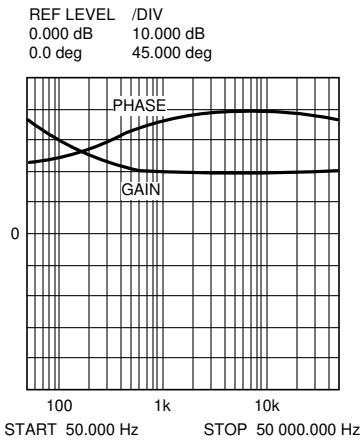

Figure 7-6. Error Amplifier Gain and Phase

The overall loop can be predicted as the sum (in dB) of the modulator gain and the error amp gain.

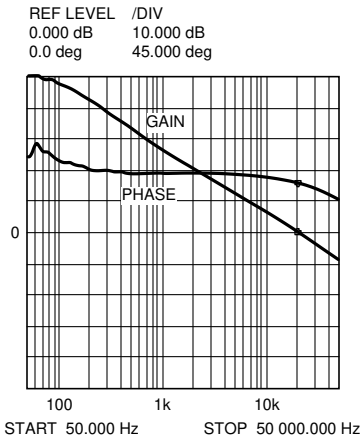

Figure 7-7. Overall Loop Gain and Phase

If a network analyzer is available, the modulator gain can be measured and the error amplifier gain can be configured for the desired loop transfer function. If a network analyzer is not available, the error amplifier compensation components can be designed with the guidelines given. Step load transient tests can be performed to verify acceptable performance. The step load goal is minimum overshoot with a damped response. C6 can be added to the compensation network to decrease noise susceptibility of the error amplifier. The value of C6 must be sufficiently small since the addition of this capacitor adds a pole in the error amplifier transfer function. This pole must be well beyond the loop crossover frequency. A good approximation of the location of the pole added by C6 is: f_{p2} = fz x C5 / C6.

7.2.4 Detailed Design Procedure

7.2.4.1 Custom Design With WEBENCH® Tools

Click here to create a custom design using the LM25576 device with the WEBENCH® Power Designer.

1. Start by entering the input voltage (V_{IN}), output voltage (V_{OUT}), and output current (I_{OUT}) requirements.
2. Optimize the design for key parameters such as efficiency, footprint, and cost using the optimizer dial.
3. Compare the generated design with other possible solutions from Texas Instruments.

Copyright © 2025 Texas Instruments Incorporated

The WEBENCH Power Designer provides a customized schematic along with a list of materials with real-time pricing and component availability.

In most cases, these actions are available:

- Run electrical simulations to see important waveforms and circuit performance
- Run thermal simulations to understand board thermal performance
- Export customized schematic and layout into popular CAD formats
- Print PDF reports for the design, and share the design with colleagues

Get more information about WEBENCH tools at www.ti.com/WEBENCH.

7.2.5 Application Curves

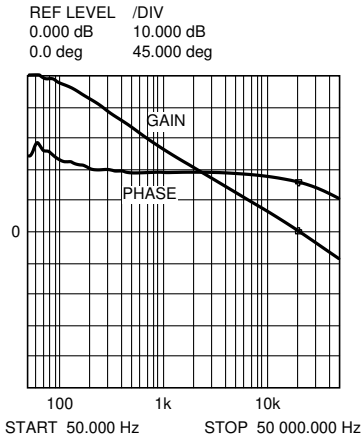

Figure 7-8. Overall Loop Gain and Phase

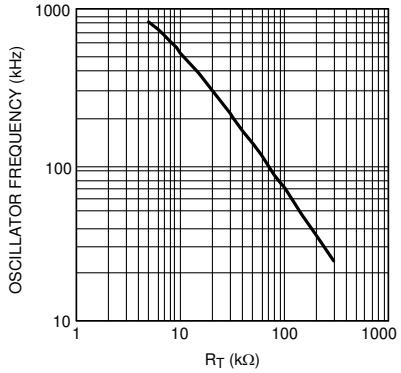

Figure 7-9. Oscillator Frequency vs RT

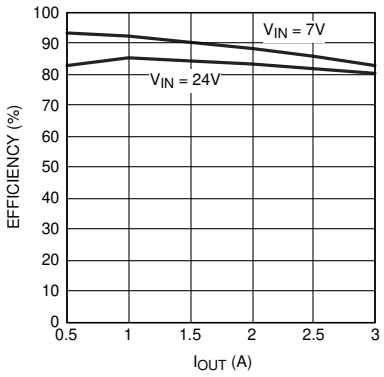

Figure 7-10. Demoboard Efficiency

7.3 Power Supply Recommendations

The LM25576 converter is designed to operate from a wide input voltage range from 7V to 42V. The characteristics of the input supply must be compatible with the *Absolute Maximum Ratings* and *Recommended Operating Conditions*. In addition, establish that the input supply is capable of delivering the required input current to the fully-loaded regulator. Estimate the average input current with below equation:

$$I_{IN} = \frac{V_{OUT} \times I_{OUT}}{V_{IN} \times \eta} \quad (15)$$

where

Copyright © 2025 Texas Instruments Incorporated

η is the efficiency.

If the converter is connected to an input supply through long wires or PCB traces with large impedance, special care is required to achieve stable performance. The parasitic inductance and resistance of the input cables can have an adverse affect on converter operation. The parasitic inductance in combination with the low ESR ceramic input capacitors form an under-damped resonant circuit. This circuit can cause overvoltage transients at VIN each time the input supply is cycled ON and OFF. The parasitic resistance causes the input voltage to dip during a load transient. If the regulator is operating close to the minimum input voltage, this dip can cause false UVLO fault triggering and a system reset. The best way to solve such issues is to reduce the distance from the input supply to the regulator and use an aluminum or tantalum input capacitor in parallel with the ceramics.

The moderate ESR of the electrolytic capacitors helps to damp the input resonant circuit and reduce any voltage overshoots. A capacitance in the range of 10µF to 47µF is typically sufficient to provide input damping and helps to hold the input voltage steady during large load transients.

An EMI input filter is often used in front of the regulator that, unless carefully designed, can lead to instability as well as some of the effects mentioned above. The *AN-2162 Simple Success With Conducted EMI From DC-DC Converters* application note provides helpful suggestions for designing an input filter for any switching regulator.

7.4 Layout

7.4.1 Layout Guidelines

7.4.1.1 PCB Layout

The circuit in Figure 7-2 serves as both a block diagram of the LM25576 and a typical application board schematic for the LM25576. In a buck regulator there are two loops where currents are switched very fast. The first loop starts from the input capacitors, to the regulator VIN pin, to the regulator SW pin, to the inductor then out to the load. The second loop starts from the output capacitor ground, to the regulator PGND pins, to the regulator IS pins, to the diode anode, to the inductor and then out to the load. Minimizing the loop area of these two loops reduces the stray inductance and minimizes noise and possible erratic operation. A ground plane in the PC board is recommended as a means to connect the input filter capacitors to the output filter capacitors and the PGND pins of the regulator. Connect all of the low power ground connections (C_{SS}, R_T, C_{RAMP}) directly to the regulator AGND pin. Connect the AGND and PGND pins together through the topside copper area covering the entire underside of the device. Place several vias in this underside copper area to the ground plane.

Table 7-1. 5 V, 3 A Demo Board Bill of Materials

ITEM		PART NUMBER	DESCRIPTION	VALUE
C	1	C4532X7R2A225M	CAPACITOR, CER, TDK	2.2µ, 100V
C	2	C4532X7R2A225M	CAPACITOR, CER, TDK	2.2µ, 100V
C	3	C0805C331G1GAC	CAPACITOR, CER, KEMET	330p, 100V
C	4	C2012X7R2A103K	CAPACITOR, CER, TDK	0.01µ, 100V
C	5	C2012X7R2A103K	CAPACITOR, CER, TDK	0.01µ, 100V
C	6	OPEN	NOT USED	
C	7	C2012X7R2A223K	CAPACITOR, CER, TDK	0.022µ, 100V
C	8	C2012X7R1C474M	CAPACITOR, CER, TDK	0.47µ, 16V
C	9	C3225X7R1C226M	CAPACITOR, CER, TDK	22µ, 16V
C	10	EEFHE0J151R	CAPACITOR, SP, PANASONIC	150µ, 6.3V
C	11	C0805C331G1GAC	CAPACITOR, CER, KEMET	330p, 100V
C	12	OPEN	NOT USED	
D	1	CSHD6-60C	DIODE, 60V, CENTRAL	
		6CWQ10FN	DIODE, 100V, IR (D1-ALT)	
L	1	DR127-330	INDUCTOR, COOPER	33µH
R	1	OPEN	NOT USED	
R	2	OPEN	NOT USED	
R	3	CRCW08052102F	RESISTOR	21kΩ

Copyright © 2025 Texas Instruments Incorporated

Table 7-1. 5 V, 3 A Demo Board Bill of Materials (continued)

ITEM		PART NUMBER	DESCRIPTION	VALUE
R	4	CRCW08054992F	RESISTOR	49.9kΩ
R	5	CRCW08055111F	RESISTOR	5.11kΩ
R	6	CRCW08051651F	RESISTOR	1.65kΩ
R	7	CRCW2512100J	RESISTOR	10, 1W
U	1	LM25576	REGULATOR, TEXAS INSTRUMENTS	

7.4.2 Layout Example

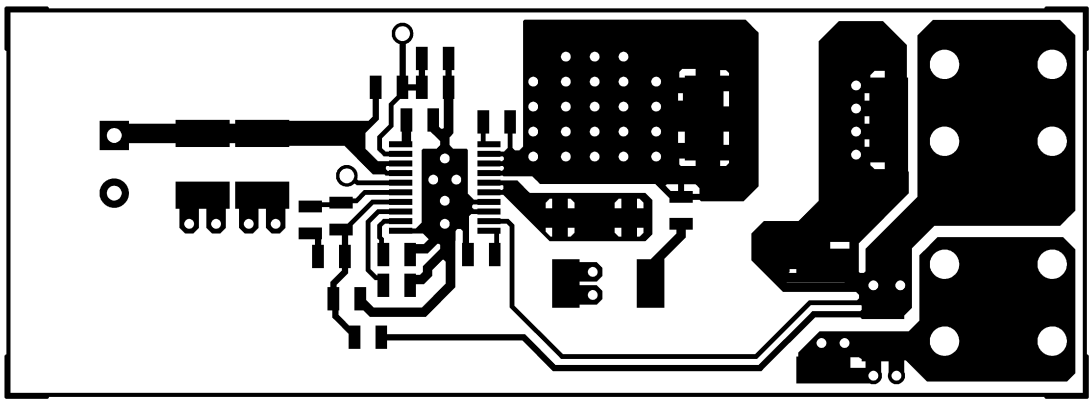

Figure 7-11. Component Side

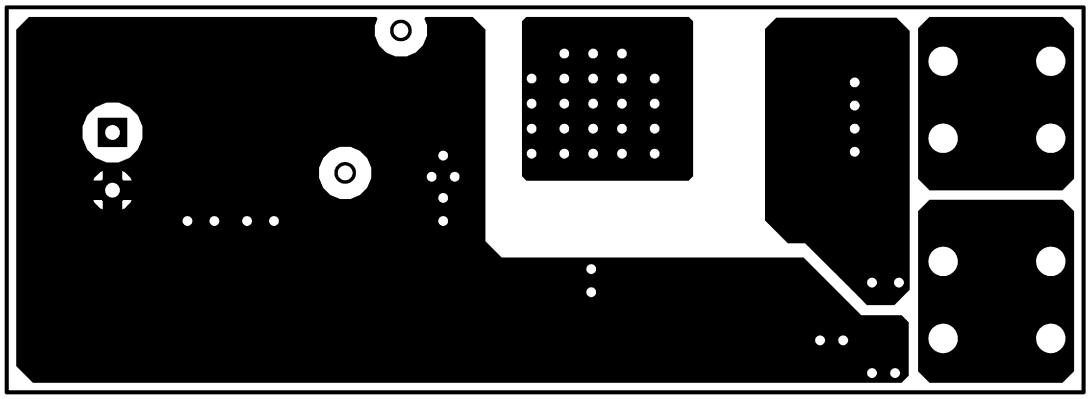

Figure 7-12. Solder Side

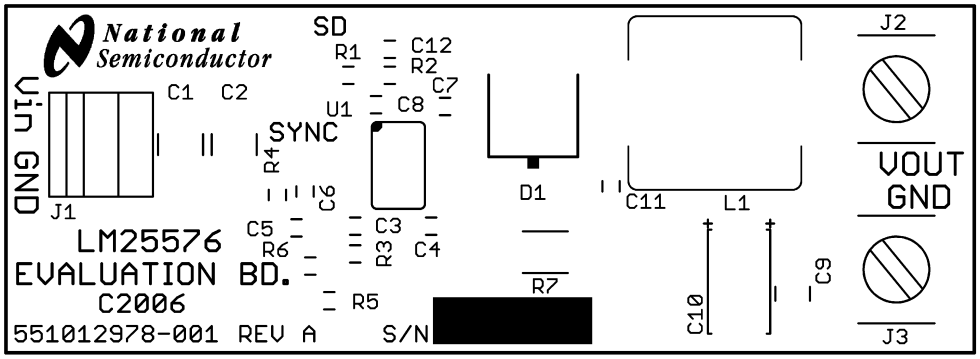

Figure 7-13. Silkscreen

Copyright © 2025 Texas Instruments Incorporated

7.4.3 Power Dissipation

The most significant variables that affect the power dissipated by the LM25576 are the output current, input voltage, and operating frequency. The power dissipated while operating near the maximum output current and maximum input voltage can be appreciable. The operating frequency of the LM25576 evaluation board has been designed for 300kHz.

7.4.4 Thermal Considerations

The two highest power dissipating components are the re-circulating diode and the LM25576 regulator IC. The easiest method to determine the power dissipated within the LM25576 is to measure the total conversion losses (Pin – Pout) then subtract the power losses in the Schottky diode, output inductor and snubber resistor. An approximation for the Schottky diode loss is P = (1-D) × Iout × Vfwd. An approximation for the output inductor power is P = IOUT 2 × R × 1.1, where R is the DC resistance of the inductor and the 1.1 factor is an approximation for the AC losses. If a snubber is used, an approximation for the damping resistor power dissipation is P = Vin2 × Fsw × Csnub, where Fsw is the switching frequency and Csnub is the snubber capacitor. The regulator has an exposed thermal pad to aid power dissipation. Adding several vias under the device to the ground plane greatly reduces the regulator junction temperature. Selecting a diode with an exposed pad aids the power dissipation of the diode.

The most significant variables that affect the power dissipated by the LM25576 are the output current, input voltage and operating frequency. The power dissipated while operating near the maximum output current and maximum input voltage can be appreciable. The operating frequency of the LM25576 evaluation board has been designed for 300kHz. When operating at 3A output current with a 42V input the power dissipation of the LM25576 regulator is approximately 1.9W.

The junction-to-ambient thermal resistance of the LM25576 varies with the application. The most significant variables are the area of copper in the PC board, the number of vias under the IC exposed pad and the amount of forced air cooling provided. Referring to the evaluation board artwork, the area under the LM25576 (component side) is covered with copper and there are 5 connection vias to the solder side ground plane. Additional vias under the IC have diminishing value as more vias are added. The integrity of the solder connection from the IC exposed pad to the PC board is critical. Excessive voids greatly diminish the thermal dissipation capacity. The junction-to-ambient thermal resistance of the LM25576 mounted in the evaluation board varies from 45°C/W with no airflow to 25°C/W with 900 LFM (Linear Feet per Minute). With a 25°C ambient temperature and no airflow, the predicted junction temperature for the LM25576 is 25 + (45 × 1.9) = 110°C. If the evaluation board is operated at 3A output current and 42V input voltage for a prolonged period of time the thermal shutdown protection within the IC can activate. The IC turns off, allowing the junction to cool, followed by restart with the soft-start capacitor reset to zero.

Copyright © 2025 Texas Instruments Incorporated

8 Device and Documentation Support

8.1 Device Support

8.1.1 Developmental Support

8.1.1.1 Custom Design With WEBENCH® Tools

Click here to create a custom design using the LM25575 device with the WEBENCH® Power Designer.

1. Start by entering the input voltage (V_{IN}), output voltage (V_{OUT}), and output current (I_{OUT}) requirements.
2. Optimize the design for key parameters such as efficiency, footprint, and cost using the optimizer dial.
3. Compare the generated design with other possible solutions from Texas Instruments.

The WEBENCH Power Designer provides a customized schematic along with a list of materials with real-time pricing and component availability.

In most cases, these actions are available:

- Run electrical simulations to see important waveforms and circuit performance
- Run thermal simulations to understand board thermal performance
- Export customized schematic and layout into popular CAD formats
- Print PDF reports for the design, and share the design with colleagues

Get more information about WEBENCH tools at www.ti.com/WEBENCH.

8.2 Documentation Support

8.2.1 Related Documentation

For related documentation, see the following:

Texas Instruments, *AN-2162 Simple Success With Conducted EMI From DC-DC Converters* application note

8.3 Receiving Notification of Documentation Updates

To receive notification of documentation updates, navigate to the device product folder on ti.com. Click on *Notifications* to register and receive a weekly digest of any product information that has changed. For change details, review the revision history included in any revised document.

8.4 Support Resources

TI E2E™ support forums are an engineer's go-to source for fast, verified answers and design help — straight from the experts. Search existing answers or ask your own question to get the quick design help you need.

Linked content is provided "AS IS" by the respective contributors. They do not constitute TI specifications and do not necessarily reflect TI's views; see TI's Terms of Use.

8.5 Trademarks

TI E2E™ is a trademark of Texas Instruments.
WEBENCH® is a registered trademark of Texas Instruments.
All trademarks are the property of their respective owners.

8.6 Electrostatic Discharge Caution



This integrated circuit can be damaged by ESD. Texas Instruments recommends that all integrated circuits be handled with appropriate precautions. Failure to observe proper handling and installation procedures can cause damage.

ESD damage can range from subtle performance degradation to complete device failure. Precision integrated circuits may be more susceptible to damage because very small parametric changes could cause the device not to meet its published specifications.

8.7 Glossary

TI Glossary	This glossary lists and explains terms, acronyms, and definitions.

Copyright © 2025 Texas Instruments Incorporated

9 Revision History

NOTE: Page numbers for previous revisions may differ from page numbers in the current version.

Changes from Revision H (August 2017) to Revision I (November 2025) **Page**

- Updated the numbering format for tables, figures, and cross-references throughout the document..... 1
- Changed all instances of legacy terminology to controller and peripheral..... 1
- Added Charged-device model spec to the *ESD Ratings* table..... 5
- Added the *Thermal Information* table..... 5
- Changed Bias Current (Iin) from 3.4mA to 2mA..... 6
- Changed Shutdown Current (Iin) from 57uA to 48uA..... 6
- Changed BOOST UVLO Hysteresis from 0.56V to 0.8V..... 6
- Changed FB Bias Current from 17nA to 10nA..... 6
- Changed the *External Components* section to the *Design Requirements* section..... 19
- Added the *Application Curves* section..... 24
- Added the *Power Supply Recommendations* section..... 24
- Added the *Power Dissipation* section..... 27
- Added the *Thermal Considerations* section..... 27

Changes from Revision G (April 2013) to Revision H (August 2017) **Page**

- Added *Application and Implementation* section, *Device Information* table, *Pin Configuration* and *Functions* section, *ESD Ratings* table, *Thermal Information* table, *Feature Description* section, *Device Functional Modes*, *Device and Documentation Support* section, and *Mechanical, Packaging, and Orderable Information* section..... 1

Copyright © 2025 Texas Instruments Incorporated

10 Mechanical, Packaging, and Orderable Information

The following pages include mechanical, packaging, and orderable information. This information is the most current data available for the designated devices. This data is subject to change without notice and revision of this document. For browser-based versions of this data sheet, refer to the left-hand navigation.

Copyright © 2025 Texas Instruments Incorporated

PACKAGING INFORMATION

Orderable part number	Status (1)	Material type (2)	Package | Pins	Package qty | Carrier	RoHS (3)	Lead finish/ Ball material (4)	MSL rating/ Peak reflow (5)	Op temp (°C)	Part marking (6)
LM25576MH/NOPB	Active	Production	HTSSOP (PWP) | 20	73 | TUBE	Yes	SN	Level-1-260C-UNLIM	-40 to 125	LM25576 MH
LM25576MH/NOPB.A	Active	Production	HTSSOP (PWP) | 20	73 | TUBE	Yes	SN	Level-1-260C-UNLIM	-40 to 125	LM25576 MH
LM25576MH/NOPB.B	Active	Production	HTSSOP (PWP) | 20	73 | TUBE	Yes	SN	Level-1-260C-UNLIM	-40 to 125	LM25576 MH
LM25576MHX/NOPB	Active	Production	HTSSOP (PWP) | 20	2500 | LARGE T&R	Yes	Call TI | Sn	Level-1-260C-UNLIM	-40 to 125	LM25576 MH
LM25576MHX/NOPB.A	Active	Production	HTSSOP (PWP) | 20	2500 | LARGE T&R	Yes	Call TI	Level-1-260C-UNLIM	-40 to 125	LM25576 MH
LM25576MHX/NOPB.B	Active	Production	HTSSOP (PWP) | 20	2500 | LARGE T&R	Yes	Call TI	Level-1-260C-UNLIM	-40 to 125	LM25576 MH

(1) **Status:** For more details on status, see our product life cycle.

(2) **Material type:** When designated, preproduction parts are prototypes/experimental devices, and are not yet approved or released for full production. Testing and final process, including without limitation quality assurance, reliability performance testing, and/or process qualification, may not yet be complete, and this item is subject to further changes or possible discontinuation. If available for ordering, purchases will be subject to an additional waiver at checkout, and are intended for early internal evaluation purposes only. These items are sold without warranties of any kind.

(3) **RoHS values:** Yes, No, RoHS Exempt. See the TI RoHS Statement for additional information and value definition.

(4) **Lead finish/Ball material:** Parts may have multiple material finish options. Finish options are separated by a vertical ruled line. Lead finish/Ball material values may wrap to two lines if the finish value exceeds the maximum column width.

(5) **MSL rating/Peak reflow:** The moisture sensitivity level ratings and peak solder (reflow) temperatures. In the event that a part has multiple moisture sensitivity ratings, only the lowest level per JEDEC standards is shown. Refer to the shipping label for the actual reflow temperature that will be used to mount the part to the printed circuit board.

(6) **Part marking:** There may be an additional marking, which relates to the logo, the lot trace code information, or the environmental category of the part.

Multiple part markings will be inside parentheses. Only one part marking contained in parentheses and separated by a "~" will appear on a part. If a line is indented then it is a continuation of the previous line and the two combined represent the entire part marking for that device.

Important Information and Disclaimer: The information provided on this page represents TI's knowledge and belief as of the date that it is provided. TI bases its knowledge and belief on information provided by third parties, and makes no representation or warranty as to the accuracy of such information. Efforts are underway to better integrate information from third parties. TI has taken and continues to take reasonable steps to provide representative and accurate information but may not have conducted destructive testing or chemical analysis on incoming materials and chemicals. TI and TI suppliers consider certain information to be proprietary, and thus CAS numbers and other limited information may not be available for release.

In no event shall TI's liability arising out of such information exceed the total purchase price of the TI part(s) at issue in this document sold by TI to Customer on an annual basis.

OTHER QUALIFIED VERSIONS OF LM25576 :

- Automotive : LM25576-Q1

NOTE: Qualified Version Definitions:

- Automotive - Q100 devices qualified for high-reliability automotive applications targeting zero defects

TAPE AND REEL INFORMATION

REEL DIMENSIONS

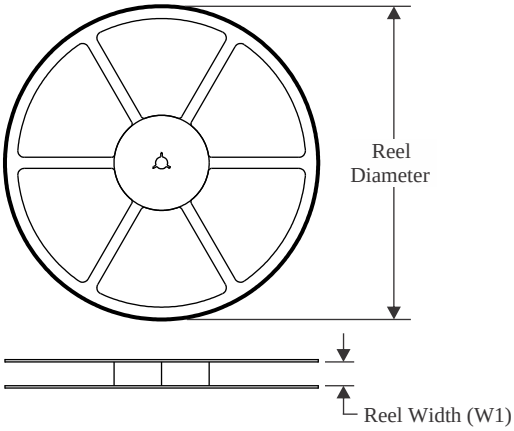

TAPE DIMENSIONS

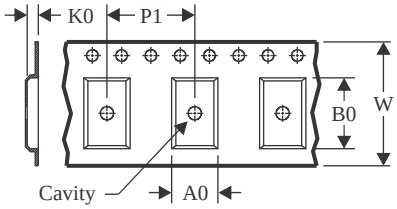

A0	Dimension designed to accommodate the component width
B0	Dimension designed to accommodate the component length
K0	Dimension designed to accommodate the component thickness
W	Overall width of the carrier tape
P1	Pitch between successive cavity centers

QUADRANT ASSIGNMENTS FOR PIN 1 ORIENTATION IN TAPE

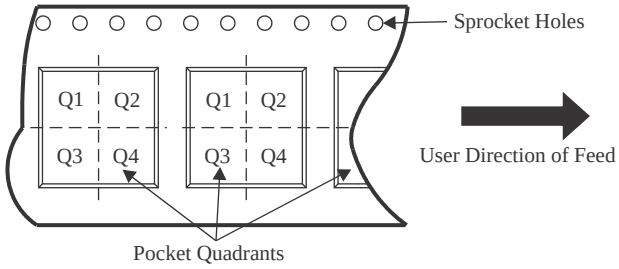

*All dimensions are nominal

Device	Package Type	Package Drawing	Pins	SPQ	Reel Diameter (mm)	Reel Width W1 (mm)	A0 (mm)	B0 (mm)	K0 (mm)	P1 (mm)	W (mm)	Pin1 Quadrant
LM25576MHX/NOPB	HTSSOP	PWP	20	2500	330.0	16.4	6.95	7.0	1.4	8.0	16.0	Q1

TAPE AND REEL BOX DIMENSIONS

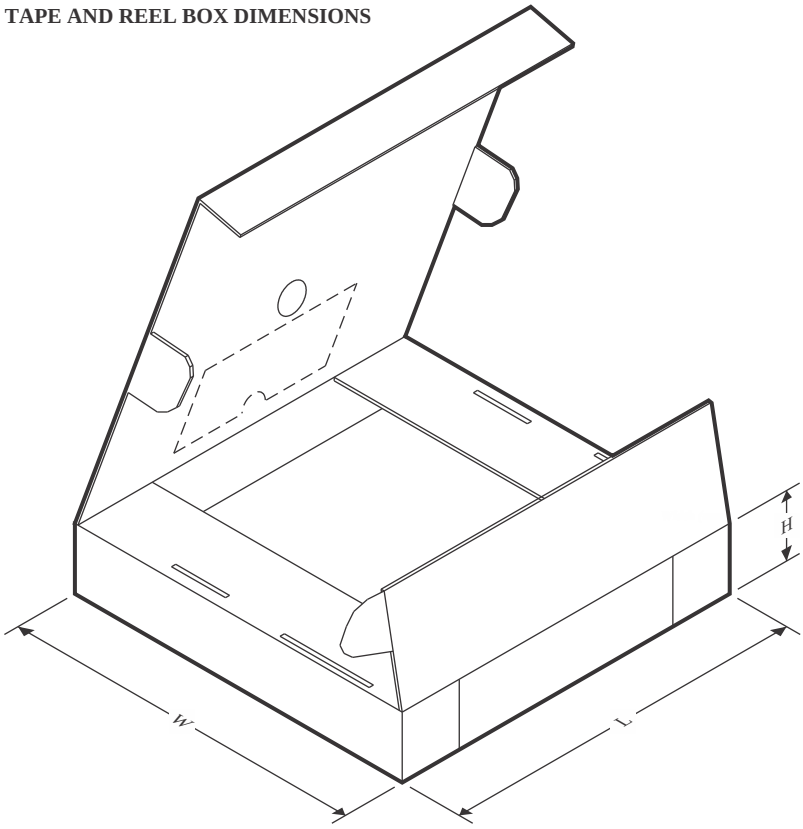

*All dimensions are nominal

Device	Package Type	Package Drawing	Pins	SPQ	Length (mm)	Width (mm)	Height (mm)
LM25576MHX/NOPB	HTSSOP	PWP	20	2500	367.0	367.0	35.0

TUBE

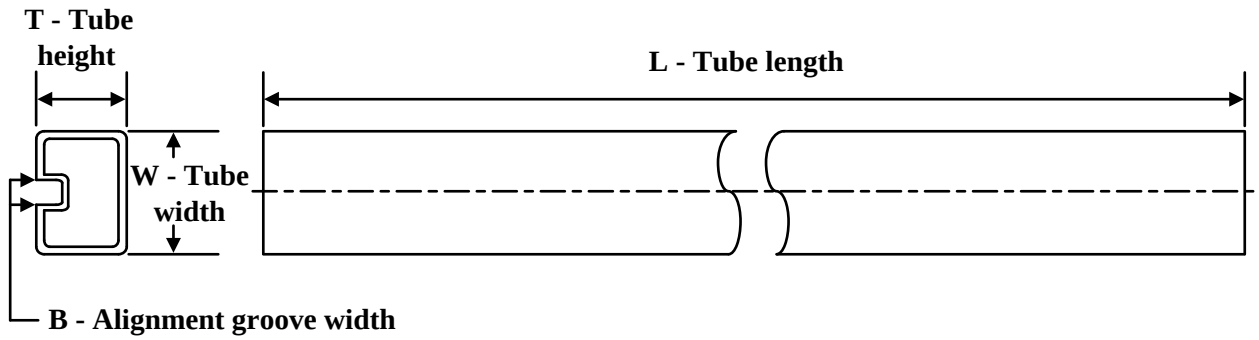

*All dimensions are nominal

Device	Package Name	Package Type	Pins	SPQ	L (mm)	W (mm)	T (µm)	B (mm)
LM25576MH/NOPB	PWP	HTSSOP	20	73	495	8	2514.6	4.06
LM25576MH/NOPB.A	PWP	HTSSOP	20	73	495	8	2514.6	4.06
LM25576MH/NOPB.B	PWP	HTSSOP	20	73	495	8	2514.6	4.06

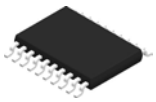

PACKAGE OUTLINE

PWP0020A

PowerPAD™ TSSOP - 1.1 mm max height

PLASTIC SMALL OUTLINE

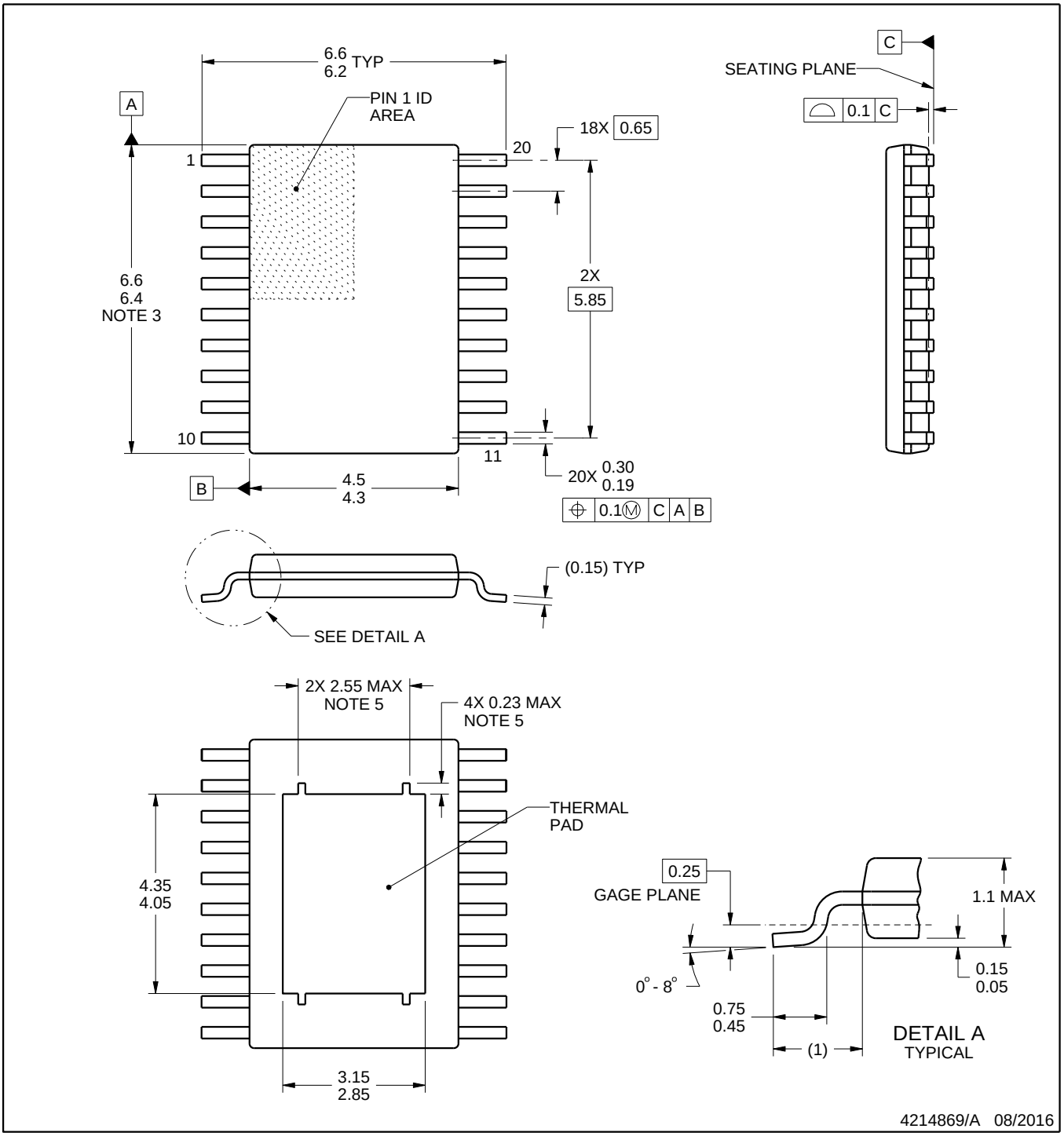

PowerPAD is a trademark of Texas Instruments.

NOTES:

1. All linear dimensions are in millimeters. Any dimensions in parenthesis are for reference only. Dimensioning and tolerancing per ASME Y14.5M.
2. This drawing is subject to change without notice.
3. This dimension does not include mold flash, protrusions, or gate burrs. Mold flash, protrusions, or gate burrs shall not exceed 0.15 mm per side.
4. Reference JEDEC registration MO-153.
5. Features may differ or may not be present.

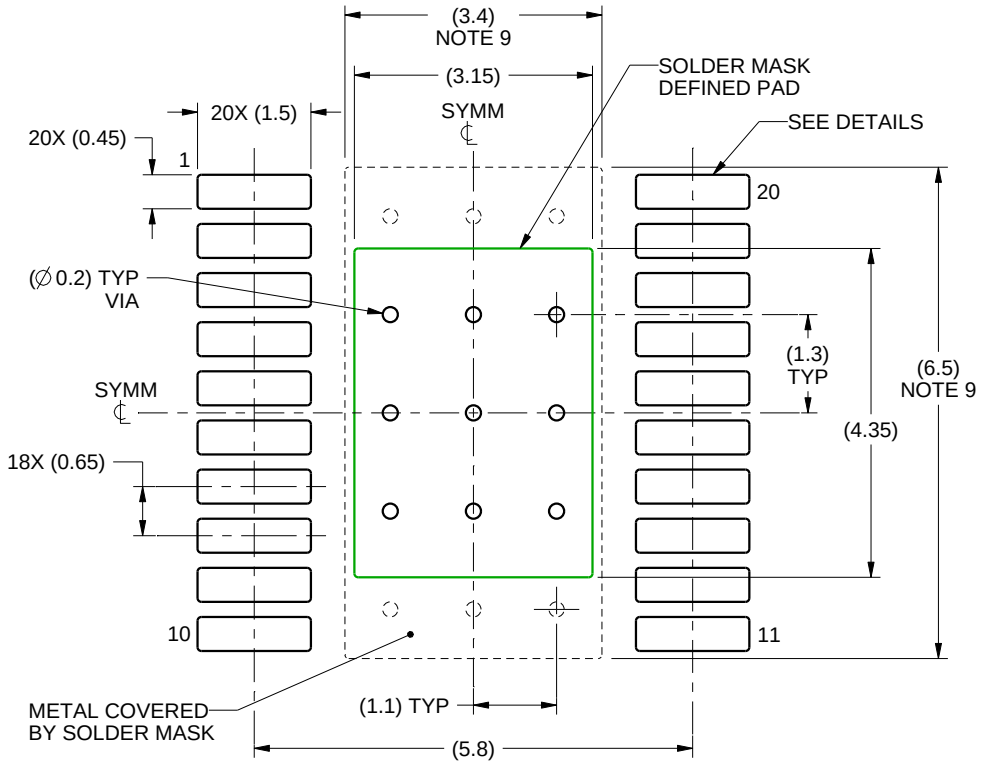

LAND PATTERN EXAMPLE
SCALE:10X

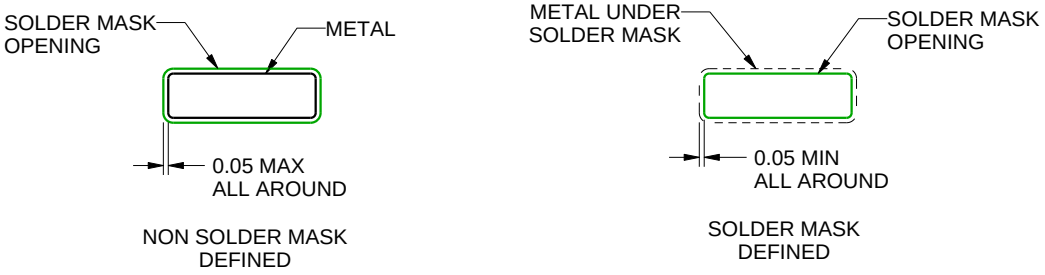

SOLDER MASK DETAILS
PADS 1-20

4214869/A 08/2016

NOTES: (continued)

6. Publication IPC-7351 may have alternate designs.
7. Solder mask tolerances between and around signal pads can vary based on board fabrication site.
8. This package is designed to be soldered to a thermal pad on the board. For more information, see Texas Instruments literature numbers SLMA002 (www.ti.com/lit/slma002) and SLMA004 (www.ti.com/lit/slma004).
9. Size of metal pad may vary due to creepage requirement.

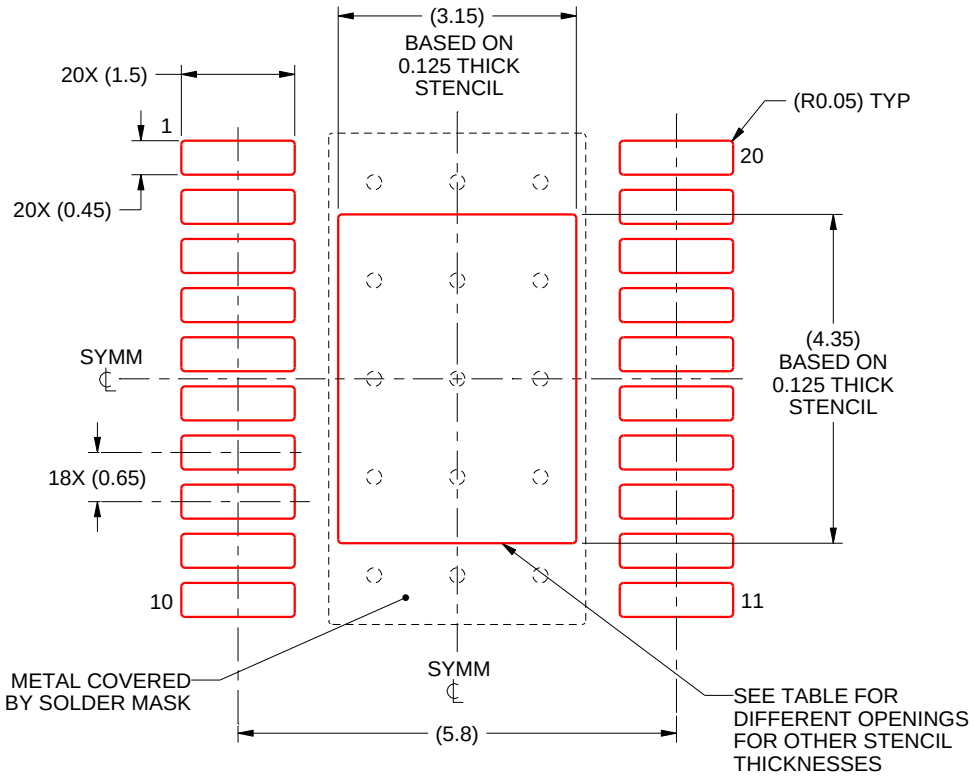

SOLDER PASTE EXAMPLE
EXPOSED PAD
100% PRINTED SOLDER COVERAGE BY AREA
SCALE:10X

STENCIL THICKNESS	SOLDER STENCIL OPENING
0.1	3.52 X 4.86
0.125	3.15 X 4.35 (SHOWN)
0.15	2.88 X 3.97
0.175	2.66 X 3.68

4214869/A 08/2016

NOTES: (continued)

10. Laser cutting apertures with trapezoidal walls and rounded corners may offer better paste release. IPC-7525 may have alternate design recommendations.
11. Board assembly site may have different recommendations for stencil design.

IMPORTANT NOTICE AND DISCLAIMER

TI PROVIDES TECHNICAL AND RELIABILITY DATA (INCLUDING DATASHEETS), DESIGN RESOURCES (INCLUDING REFERENCE DESIGNS), APPLICATION OR OTHER DESIGN ADVICE, WEB TOOLS, SAFETY INFORMATION, AND OTHER RESOURCES “AS IS” AND WITH ALL FAULTS, AND DISCLAIMS ALL WARRANTIES, EXPRESS AND IMPLIED, INCLUDING WITHOUT LIMITATION ANY IMPLIED WARRANTIES OF MERCHANTABILITY, FITNESS FOR A PARTICULAR PURPOSE OR NON-INFRINGEMENT OF THIRD PARTY INTELLECTUAL PROPERTY RIGHTS.

These resources are intended for skilled developers designing with TI products. You are solely responsible for (1) selecting the appropriate TI products for your application, (2) designing, validating and testing your application, and (3) ensuring your application meets applicable standards, and any other safety, security, regulatory or other requirements.

These resources are subject to change without notice. TI grants you permission to use these resources only for development of an application that uses the TI products described in the resource. Other reproduction and display of these resources is prohibited. No license is granted to any other TI intellectual property right or to any third party intellectual property right. TI disclaims responsibility for, and you fully indemnify TI and its representatives against any claims, damages, costs, losses, and liabilities arising out of your use of these resources.

TI’s products are provided subject to TI’s Terms of Sale, TI’s General Quality Guidelines, or other applicable terms available either on ti.com or provided in conjunction with such TI products. TI’s provision of these resources does not expand or otherwise alter TI’s applicable warranties or warranty disclaimers for TI products. Unless TI explicitly designates a product as custom or customer-specified, TI products are standard, catalog, general purpose devices.

TI objects to and rejects any additional or different terms you may propose.

Copyright © 2026, Texas Instruments Incorporated

Last updated 10/2025