Overview

The KEMET ESK radial aluminum electrolytic capacitors are designed for high-density printed circuit boards requiring a miniature solution.

Applications

Typical applications include general purpose coupling, decoupling, bypass, and filtering in consumer electronics.

Benefits

- Operating temperature of up to 85°C
- 2,000 hour operating life
- Case with Ø D ≥ 5 mm
- Safety vent on the capacitor base

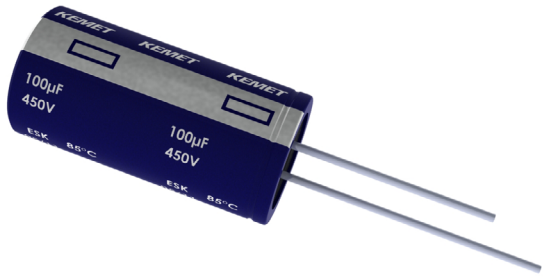

Part Number System

ESK	226	M	6R3		A	C3	AA
Series	Capacitance Code (pF)	Tolerance	Rated Voltage (VDC)		Electrical Parameters	Size Code	Packaging
Radial Aluminum Electrolytic	First two digits represent significant figures for capacitance values. Last digit specifies the number of zeros to be added.	M = ±20%	6R3 = 6.3 010 = 10 016 = 16 025 = 25 035 = 35 050 = 50 063 = 63	100 = 100 160 = 160 200 = 200 250 = 250 350 = 350 400 = 400 450 = 450 500 = 500	A = Standard	See Dimension Table	See Ordering Options Table

Ordering Options Table

Diameter	Length	Packaging Type	Lead Type	Lead Length (mm)	Lead and Packaging Code
Standard Bulk Packaging Options					
4 – 22	All	Bulk (bag)	Straight	20/15 Minimum	AA
Tape & Reel					
4 – 5	All	Tape & Reel	Formed to 2.5 mm	H_0 = 16 ±0.75	LA
4 – 8	All	Tape & Reel	2.5 mm lead spacing	H_0 = 18.5 ±0.75	KA
4 – 8	All	Tape & Reel	Formed to 5 mm	H_0 = 16 ±0.75	JA
10	≤ 20	Tape & Reel	Straight	H_0 = 18.5 ±0.75	KA
Ammo Pack					
4 – 8	All	Ammo	Formed to 5 mm	H_0 = 16 ±0.75	DA
4 – 8	All	Ammo	Straight	H_0 = 18.5 ±0.75	EA
4 – 5	All	Ammo	Formed to 2.5 mm	H_0 = 16 ±0.75	FA
10 – 13	All	Ammo	5 mm lead spacing	H_0 = 18.5 ±0.75	EA
16	All	Ammo	7.5 mm lead spacing	H_0 = 18.5 ±0.75	EA
18	≤ 25	Ammo	7.5 mm lead spacing	H_0 = 18.5 ±0.75	EA
Contact KEMET for other lead and packaging options					

Environmental Compliance

As an environmentally conscious company, KEMET is working continuously with improvements concerning the environmental effects of both our capacitors and their production. In Europe (RoHS Directive) and in some other geographical areas like China, legislation has been put in place to prevent the use of some hazardous materials, such as lead (Pb), in electronic equipment. All products in this catalog are produced to help our customers' obligations to guarantee their products and fulfill these legislative requirements. The only material of concern in our products has been lead (Pb), which has been removed from all designs to fulfill the requirement of containing less than 0.1% of lead in any homogeneous material. KEMET will closely follow any changes in legislation world wide and make any necessary changes in its products, whenever needed.

Some customer segments such as medical, military and automotive electronics may still require the use of lead in electrode coatings. To clarify the situation and distinguish products from each other, a special symbol is used on the packaging labels for RoHS compatible capacitors.

Due to customer requirements, there may appear additional markings such as lead free (LF) or lead-free wires (LFW) on the label.

Dimensions – Millimeters

SIDE VIEW

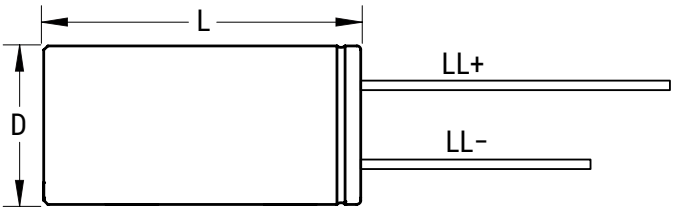

TERMINAL END VIEW

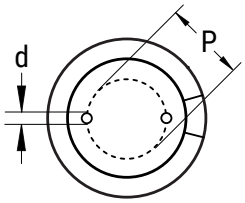

Size Code	D		L		P		d		LL+/LL–
	Nominal	Tolerance	Nominal	Tolerance	Nominal	Tolerance	Nominal	Tolerance	Minimum
C3	5.0	±0.5	11.0	±1.5	2.0	±0.5	0.5	Nominal	20/15
E3	6.3	±0.5	11.0	±1.5	2.5	±0.5	0.5	Nominal	20/15
G3	8.0	±0.5	11.0	±1.5	3.5	±0.5	0.6	Nominal	20/15
G7	8.0	±0.5	14.0	±2.0	3.5	±0.5	0.6	Nominal	20/15
G4	8.0	±0.5	15.0	±2.0	3.5	±0.5	0.6	Nominal	20/15
H9	10.0	±0.5	12.5	±1.5	5.0	±0.5	0.6	Nominal	20/15
H1	10.0	±0.5	12	±1.5	5.0	±0.5	0.6	Nominal	20/15
H2	10.0	±0.5	15.0	±2.0	5.0	±0.5	0.6	Nominal	20/15
H4	10.0	±0.5	20.0	±2.0	5.0	±0.5	0.6	Nominal	20/15
L2	13.0	±0.5	16.0	±2.0	5.0	±0.5	0.6	Nominal	20/15
L3	13.0	±0.5	20.0	±2.0	5.0	±0.5	0.6	Nominal	20/15
L4	13.0	±0.5	25.0	±2.0	5.0	±0.5	0.6	Nominal	20/15
M7	16.0	±0.5	25.0	±2.0	7.5	±0.5	0.8	Nominal	20/15
M1	16.0	±0.5	26.0	±2.0	7.5	±0.5	0.8	Nominal	20/15
M2	16.0	±0.5	32.0	±2.0	7.5	±0.5	0.8	Nominal	20/15
M3	16.0	±0.5	36.0	±2.0	7.5	±0.5	0.8	Nominal	20/15
M4	16.0	±0.5	40.0	±2.0	7.5	±0.5	0.8	Nominal	20/15
N5	18.0	±0.5	25.0	±2.0	7.5	±0.5	0.8	Nominal	20/15
N1	18.0	±0.5	32.0	±2.0	7.5	±0.5	0.8	Nominal	20/15
N2	18.0	±0.5	36.0	±2.0	7.5	±0.5	0.8	Nominal	20/15
N3	18.0	±0.5	40.0	±2.0	7.5	±0.5	0.8	Nominal	20/15
Q3	22.0	±0.5	35.0	±2.0	10.0	±0.5	0.8	Nominal	20/15
Q4	22.0	±0.5	40.0	±2.0	10.0	±0.5	0.8	Nominal	20/15

Performance Characteristics

Item	Performance Characteristics	
Capacitance Range	1– 22,000 µF	1 – 470 µF
Capacitance Tolerance	±20% at 120 Hz/20°C	
Rated Voltage	6.3 – 100 VDC	160 – 500 VDC
Life Test	2,000 hours (see conditions in Test Methods & Performance)	
Operating Temperature	–40°C to +85°C	–25°C to +85°C
Leakage Current	I ≤ 0.01 CV or 3 µA, whichever is greater	I = 0.03 CV + 10 (µA)
	C = rated capacitance (µF), V = rated voltage (VDC). Voltage applied for 2 minutes at 20°C.	

Impedance Z Characteristics at 120 Hz

Rated Voltage (VDC)	6	10	16	25	35 – 100	160 – 250	315 – 350	400 – 500
Z (–25°C)/Z (20°C)	8	6	5	3	3	7	10	15
Z (–40°C)/Z (20°C)	10	8	6	4	3	–	–	–

Compensation Factor of Ripple Current (RC) vs. Frequency

Rated Voltage (VDC)	Capacitance Range (µF)	120 Hz	300 Hz	1 kHz	10 kHz
6.3 – 100	1 – 68	1.00	1.20	1.30	1.50
6.3 – 100	100 – 680	1.00	1.10	1.15	1.20
6.3 – 100	1,000 – 22,000	1.00	1.05	1.10	1.15
160 – 450	1 – 220	1.00	1.25	1.40	1.40
160 – 450	330 – 22,000	1.00	1.10	1.13	1.13
500	All	1.00	1.05	1.10	1.10

Test Method & Performance

Conditions	Load Life Test	Shelf Life Test
Temperature	85°C	85°C
Test Duration	2,000 hours	1,000 hours
Ripple Current	Maximum ripple current specified at 120 Hz 85°C	No ripple current applied
Voltage	The sum of DC voltage and the peak AC voltage must not exceed the rated voltage of the capacitor.	No voltage applied
Performance	**The following specifications will be satisfied when the capacitor is restored to 20°C:**	
Capacitance Change	Within ±20% of the initial value	
Dissipation Factor	Does not exceed 200% of the specified value	
Leakage Current	Does not exceed specified value	

Shelf Life

The capacitance, ESR and impedance of a capacitor will not change significantly after extended storage periods, however, the leakage current will very slowly increase.

KEMET's E aluminum electrolytic capacitors should not be stored in high temperatures or where there is a high level of humidity. The suitable storage condition for KEMET's E aluminum electrolytic capacitors is +5 to +35°C and less than 75% in relative humidity. KEMET's E aluminum electrolytic capacitors should not be stored in damp conditions such as water, saltwater spray or oil spray. KEMET's E aluminum electrolytic capacitors should not be stored in an environment full of hazardous gas (hydrogen sulphide, sulphurous acid gas, nitrous acid, chlorine gas, ammonium, etc.) KEMET's E aluminum electrolytic capacitors should not be stored under exposure to ozone, ultraviolet rays or radiation.

If a capacitor has been stored for more than 18 months under these conditions and it shows increased leakage current, then a treatment by voltage application is recommended.

Re-Age (Reforming) Procedure

Apply the rated voltage to the capacitor at room temperature for a period of one hour, or until the leakage current has fallen to a steady value below the specified limit. During re-aging a maximum charging current of twice the specified leakage current or 5 mA, whichever is greater, is suggested.

Table 1 – Ratings & Part Number Reference

Rated Voltage	Surge Voltage	Rated Capacitance	Case Size	DF	RC	LC	Part Number
(VDC)	(VDC)	120 Hz 20°C (µF)	D x L (mm)	120 Hz 20°C (tanδ %)*	120 Hz 85°C (mA)	20°C 2 minutes (µA)	( ) Represents Part Number Options
6.3	8	1,000.00	10 x 12.5	24	580	63.0	ESK108M6R3AH9(1)
6.3	8	2,200.00	10 x 20	24	840	138.6	ESK228M6R3AH4(1)
6.3	8	3,300.00	10 x 20	24	1,000	207.9	ESK338M6R3AH4(1)
6.3	8	4,700.00	13 x 20	24	1,300	296.1	ESK478M6R3AL3(1)
6.3	8	6,800.00	13 x 25	24	1,550	428.4	ESK688M6R3AL4(1)
6.3	8	10,000.00	16 x 25	24	1,900	630.0	ESK109M6R3AM7(1)
6.3	8	15,000.00	16 x 36	24	2,500	945.0	ESK159M6R3AM3(1)
6.3	8	22,000.00	18 x 40	24	3,650	1,386.0	ESK229M6R3AN3(1)
6.3	8	22.00	5 x 11	24	35	3.0	ESK226M6R3AC3(1)
6.3	8	33.00	5 x 11	24	55	3.0	ESK336M6R3AC3(1)
6.3	8	47.00	5 x 11	24	75	3.0	ESK476M6R3AC3(1)
6.3	8	100.00	5 x 11	24	130	6.3	ESK107M6R3AC3(1)
6.3	8	220.00	5 x 11	24	200	13.9	ESK227M6R3AC3(1)
6.3	8	220.00	6.3 x 11	24	240	13.9	ESK227M6R3AE3(1)
6.3	8	330.00	6.3 x 11	24	260	20.8	ESK337M6R3AE3(1)
6.3	8	470.00	6.3 x 11	24	330	29.6	ESK477M6R3AE3(1)
6.3	8	680.00	8 x 11	24	410	42.8	ESK687M6R3AG3(1)
6.3	8	1,000.00	8 x 11	24	460	63.0	ESK108M6R3AG3(1)
10	13	1,000.00	10 x 12	19	580	100.0	ESK108M010AH1(1)
10	13	1,000.00	10 x 12.5	20	580	100.0	ESK108M010AH9(1)
10	13	2,200.00	10 x 20	20	880	220.0	ESK228M010AH4(1)
10	13	3,300.00	13 x 20	20	1,250	330.0	ESK338M010AL3(1)
10	13	4,700.00	13 x 25	20	1,500	470.0	ESK478M010AL4(1)
10	13	6,800.00	16 x 25	20	1,900	680.0	ESK688M010AM7(1)
10	13	10,000.00	16 x 36	20	2,225	1,000.0	ESK109M010AM3(1)
10	13	10,000.00	18 x 32	20	2,225	1,000.0	ESK109M010AN1(1)
10	13	15,000.00	18 x 36	20	2,950	1,500.0	ESK159M010AN2(1)
10	13	22,000.00	22 x 40	20	3,700	2,200.0	ESK229M010AQ4(1)
10	13	4.70	5 x 11	20	20	3.0	ESK475M010AC3(1)
10	13	10.00	5 x 11	20	35	3.0	ESK106M010AC3(1)
10	13	22.00	5 x 11	20	55	3.0	ESK226M010AC3(1)
10	13	33.00	5 x 11	20	80	3.3	ESK336M010AC3(1)
10	13	47.00	5 x 11	20	95	4.7	ESK476M010AC3(1)
10	13	100.00	5 x 11	20	180	10.0	ESK107M010AC3(1)
10	13	220.00	5 x 11	19	230	22.0	ESK227M010AC3(1)
10	13	220.00	6.3 x 11	20	250	22.0	ESK227M010AE3(1)
10	13	330.00	6.3 x 11	20	265	33.0	ESK337M010AE3(1)
10	13	470.00	6.3 x 11	20	320	47.0	ESK477M010AE3(1)
10	13	330.00	8 x 11	20	300	33.0	ESK337M010AG3DA
10	13	680.00	8 x 11	20	410	68.0	ESK687M010AG3(1)
10	13	680.00	8 x 15	19	430	68.0	ESK687M010AG4(1)
16	20	680.00	10 x 12.5	16	510	108.8	ESK687M016AH9(1)
16	20	1,000.00	10 x 15	16	630	160.0	ESK108M016AH2(1)
16	20	2,200.00	13 x 20	16	1,100	352.0	ESK228M016AL3(1)
16	20	3,300.00	13 x 25	16	1,400	528.0	ESK338M016AL4(1)
16	20	4,700.00	16 x 25	16	1,800	752.0	ESK478M016AM7(1)
16	20	4,700.00	16 x 26	16	1,800	752.0	ESK478M016AM1(1)
16	20	6,800.00	16 x 32	16	1,980	1,088.0	ESK688M016AM2(1)
16	20	6,800.00	16 x 36	16	2,200	1,088.0	ESK688M016AM3(1)
16	20	10,000.00	18 x 36	16	2,700	1,600.0	ESK109M016AN2(1)
16	20	15,000.00	22 x 40	16	3,150	2,400.0	ESK159M016AQ4(1)
16	20	20,000.00	22 x 40	16	3,200	3,200.0	ESK209M016AQ4(1)
16	20	22,000.00	22 x 40	16	3,800	3,520.0	ESK229M016AQ4(1)
16	20	4.70	5 x 11	16	25	3.0	ESK475M016AC3(1)
16	20	10.00	5 x 11	16	40	3.0	ESK106M016AC3(1)
16	20	22.00	5 x 11	16	75	3.5	ESK226M016AC3(1)
16	20	33.00	5 x 11	16	110	5.3	ESK336M016AC3(1)
Rated Voltage	Surge Voltage	Rated Capacitance	Case Size	DF	RC	LC	Part Number

(1) Insert packaging code. See Ordering Options Table for available options.

** When capacitance exceeds 1,000 µF, the DF value (%) is increased by 2% for every additional 1,000 µF.*

Table 1 – Ratings & Part Number Reference cont.

Rated Voltage	Surge Voltage	Rated Capacitance	Case Size	DF	RC	LC	Part Number
(VDC)	(VDC)	120 Hz 20°C (µF)	D x L (mm)	120 Hz 20°C (tanδ %)*	120 Hz 85°C (mA)	20°C 2 minutes (µA)	( ) Represents Part Number Options
16	20	47.00	5 x 11	16	130	7.5	ESK476M016AC3(1)
16	20	68.00	5 x 11	16	150	10.9	ESK686M016AC3(1)
16	20	100.00	5 x 11	16	165	16.0	ESK107M016AC3(1)
16	20	150.00	6.3 x 11	16	205	24.0	ESK157M016AE3(1)
16	20	220.00	6.3 x 11	16	260	35.2	ESK227M016AE3(1)
16	20	330.00	6.3 x 11	16	290	52.8	ESK337M016AE3(1)
16	20	330.00	8 x 11	16	360	52.8	ESK337M016AG3(1)
16	20	470.00	8 x 11	16	400	75.2	ESK477M016AG3(1)
25	32	330.00	10 x 12	14	420	82.5	ESK337M025AH1(1)
25	32	470.00	10 x 12.5	14	460	117.5	ESK477M025AH9(1)
25	32	680.00	10 x 15	14	550	170.0	ESK687M025AH2(1)
25	32	1,000.00	10 x 20	14	760	250.0	ESK108M025AH4(1)
25	32	1,000.00	13 x 16	14	760	250.0	ESK108M025AL2(1)
25	32	2,200.00	13 x 25	14	1,300	550.0	ESK228M025AL4(1)
25	32	3,300.00	16 x 25	14	1,660	825.0	ESK338M025AM7(1)
25	32	3,300.00	16 x 26	14	1,660	825.0	ESK338M025AM1(1)
25	32	4,700.00	16 x 32	14	1,950	1,175.0	ESK478M025AM2(1)
25	32	6,800.00	18 x 36	14	2,550	1,700.0	ESK688M025AN2(1)
25	32	10,000.00	22 x 40	14	2,800	2,500.0	ESK109M025AQ4(1)
25	32	15,000.00	22 x 40	14	3,200	3,750.0	ESK159M025AQ4(1)
25	32	4.70	5 x 11	14	30	3.0	ESK475M025AC3(1)
25	32	10.00	5 x 11	14	50	3.0	ESK106M025AC3(1)
25	32	22.00	5 x 11	14	90	5.5	ESK226M025AC3(1)
25	32	33.00	5 x 11	14	115	8.3	ESK336M025AC3(1)
25	32	47.00	5 x 11	14	135	11.8	ESK476M025AC3(1)
25	32	68.00	5 x 11	14	145	17.0	ESK686M025AC3(1)
25	32	100.00	5 x 11	16	145	25.0	ESK107M025AC3(1)
25	32	100.00	6.3 x 11	14	160	25.0	ESK107M025AE3(1)
25	32	220.00	8 x 11	14	290	55.0	ESK227M025AG3(1)
25	32	330.00	8 x 11	14	315	82.5	ESK337M025AG3(1)
25	32	470.00	8 x 14	14	420	117.5	ESK477M025AG7(1)
25	32	470.00	8 x 15	14	420	117.5	ESK477M025AG4(1)
35	44	330.00	10 x 12.5	12	420	115.5	ESK337M035AH9(1)
35	44	330.00	10 x 15	12	490	115.5	ESK337M035AH2(1)
35	44	470.00	10 x 15	12	430	164.5	ESK477M035AH2(1)
35	44	680.00	10 x 20	12	550	238.0	ESK687M035AH4(1)
35	44	1,000.00	13 x 20	12	950	350.0	ESK108M035AL3(1)
35	44	2,200.00	16 x 25	12	1,600	770.0	ESK228M035AM7(1)
35	44	2,200.00	16 x 26	12	1,600	770.0	ESK228M035AM1(1)
35	44	3,300.00	16 x 36	12	1,970	1,155.0	ESK338M035AM3(1)
35	44	4,700.00	16 x 36	12	1,970	1,645.0	ESK478M035AM3(1)
35	44	3,300.00	18 x 32	12	2,050	1,155.0	ESK338M035AN1(1)
35	44	4,700.00	18 x 36	12	2,400	1,645.0	ESK478M035AN2(1)
35	44	6,800.00	22 x 40	12	2,600	2,380.0	ESK688M035AQ4(1)
35	44	4.70	5 x 11	12	35	3.0	ESK475M035AC3(1)
35	44	10.00	5 x 11	12	60	3.5	ESK106M035AC3(1)
35	44	22.00	5 x 11	12	95	7.7	ESK226M035AC3(1)
35	44	33.00	5 x 11	12	120	11.6	ESK336M035AC3(1)
35	44	47.00	5 x 11	12	120	16.5	ESK476M035AC3(1)
35	44	100.00	6.3 x 11	12	185	35.0	ESK107M035AE3(1)
35	44	120.00	8 x 11	12	230	42.0	ESK127M035AG3(1)
35	44	220.00	8 x 11	12	290	77.0	ESK227M035AG3(1)
50	63	220.00	10 x 12.5	10	380	110.0	ESK227M050AH9(1)
50	63	330.00	10 x 15	10	490	165.0	ESK337M050AH2(1)
50	63	470.00	10 x 20	10	610	235.0	ESK477M050AH4(1)
50	63	1,000.00	13 x 25	10	1,100	500.0	ESK108M050AL4(1)
50	63	2,200.00	16 x 32	10	1,970	1,100.0	ESK228M050AM2(1)
Rated Voltage	**Surge Voltage**	**Rated Capacitance**	**Case Size**	**DF**	**RC**	**LC**	**Part Number**

(1) Insert packaging code. See Ordering Options Table for available options.

** When capacitance exceeds 1,000 µF, the DF value (%) is increased by 2% for every additional 1,000 µF.*

Table 1 – Ratings & Part Number Reference cont.

Rated Voltage	Surge Voltage	Rated Capacitance	Case Size	DF	RC	LC	Part Number
(VDC)	(VDC)	120 Hz 20°C (µF)	D x L (mm)	120 Hz 20°C (tanδ %)*	120 Hz 85°C (mA)	20°C 2 minutes (µA)	( ) Represents Part Number Options
50	63	2,200.00	16 x 36	10	1,850	1,100.0	ESK228M050AM3(1)
50	63	2,200.00	18 x 32	10	1,850	1,100.0	ESK228M050AN1(1)
50	63	3,300.00	18 x 36	10	2,170	1,650.0	ESK338M050AN2(1)
50	63	4,700.00	22 x 35	16	2,500	2,350.0	ESK478M050AQ3(1)
50	63	4,700.00	22 x 40	10	2,500	2,350.0	ESK478M050AQ4(1)
50	63	1.00	5 x 11	10	10	3.0	ESK105M050AC3(1)
50	63	2.20	5 x 11	10	23	3.0	ESK225M050AC3(1)
50	63	3.30	5 x 11	10	35	3.0	ESK335M050AC3(1)
50	63	4.70	5 x 11	10	40	3.0	ESK475M050AC3(1)
50	63	6.80	5 x 11	10	50	3.4	ESK685M050AC3(1)
50	63	10.00	5 x 11	10	65	5.0	ESK106M050AC3(1)
50	63	22.00	5 x 11	10	100	11.0	ESK226M050AC3(1)
50	63	33.00	5 x 11	10	105	16.5	ESK336M050AC3(1)
50	63	33.00	6.3 x 11	10	125	16.5	ESK336M050AE3(1)
50	63	47.00	6.3 x 11	10	140	23.5	ESK476M050AE3(1)
50	63	47.00	8 x 11	10	150	23.5	ESK476M050AG3(1)
50	63	100.00	8 x 11	10	230	50.0	ESK107M050AG3(1)
50	63	120.00	8 x 11	10	240	60.0	ESK127M050AG3(1)
63	79	100.00	10 x 12	9	300	63.0	ESK107M063AH1(1)
63	79	100.00	10 x 12.5	10	300	63.0	ESK107M063AH9(1)
63	79	220.00	10 x 15	10	410	138.6	ESK227M063AH2(1)
63	79	220.00	10 x 20	10	490	138.6	ESK227M063AH4(1)
63	79	330.00	10 x 20	10	540	207.9	ESK337M063AH4(1)
63	79	470.00	13 x 20	10	755	296.1	ESK477M063AL3(1)
63	79	470.00	13 x 25	9	880	296.1	ESK477M063AL4(1)
63	79	680.00	13 x 25	10	965	428.4	ESK687M063AL4(1)
63	79	1,000.00	16 x 25	10	1,310	630.0	ESK108M063AM7(1)
63	79	2,200.00	18 x 36	10	2,200	1,386.0	ESK228M063AN2(1)
63	79	2,200.00	18 x 40	9	2,200	1,386.0	ESK228M063AN3(1)
63	79	3,300.00	22 x 40	10	2,500	2,079.0	ESK338M063AQ4(1)
63	79	1.00	5 x 11	10	10	3.0	ESK105M063AC3(1)
63	79	2.20	5 x 11	10	29	3.0	ESK225M063AC3(1)
63	79	3.30	5 x 11	10	40	3.0	ESK335M063AC3(1)
63	79	4.70	5 x 11	10	45	3.0	ESK475M063AC3(1)
63	79	10.00	5 x 11	10	70	6.3	ESK106M063AC3(1)
63	79	22.00	5 x 11	10	95	13.9	ESK226M063AC3(1)
63	79	22.00	6.3 x 11	10	115	13.9	ESK226M063AE3(1)
63	79	33.00	6.3 x 11	10	130	20.8	ESK336M063AE3(1)
63	79	47.00	6.3 x 11	10	190	29.6	ESK476M063AE3(1)
63	79	100.00	8 x 11	10	235	63.0	ESK107M063AG3(1)
100	125	33.00	10 x 12	8	170	33.0	ESK336M100AH1(1)
100	125	47.00	10 x 12	8	190	47.0	ESK476M100AH1(1)
100	125	47.00	10 x 12.5	10	190	47.0	ESK476M100AH9(1)
100	125	68.00	10 x 15	10	280	68.0	ESK686M100AH2(1)
100	125	100.00	10 x 20	10	400	100.0	ESK107M100AH4(1)
100	125	150.00	13 x 20	10	500	150.0	ESK157M100AL3(1)
100	125	220.00	13 x 25	10	710	220.0	ESK227M100AL4(1)
100	125	330.00	13 x 25	10	720	330.0	ESK337M100AL4(1)
100	125	470.00	16 x 25	10	1,100	470.0	ESK477M100AM7(1)
100	125	1,000.00	16 x 32	8	1,350	1,000.0	ESK108M100AM2(1)
100	125	680.00	16 x 36	10	1,260	680.0	ESK687M100AM3(1)
100	125	1,000.00	18 x 40	10	1,350	1,000.0	ESK108M100AN3(1)
100	125	2,200.00	22 x 40	8	2,300	2,200.0	ESK228M100AQ4(1)
100	125	1.00	5 x 11	10	21	3.0	ESK105M100AC3(1)
100	125	2.20	5 x 11	10	30	3.0	ESK225M100AC3(1)
100	125	3.30	5 x 11	10	45	3.3	ESK335M100AC3(1)
100	125	4.70	5 x 11	10	50	4.7	ESK475M100AC3(1)
Rated Voltage	Surge Voltage	Rated Capacitance	Case Size	DF	RC	LC	Part Number

(1) Insert packaging code. See Ordering Options Table for available options.

** When capacitance exceeds 1,000 µF, the DF value (%) is increased by 2% for every additional 1,000 µF.*

Table 1 – Ratings & Part Number Reference cont.

Rated Voltage	Surge Voltage	Rated Capacitance	Case Size	DF	RC	LC	Part Number
(VDC)	(VDC)	120 Hz 20°C (µF)	D x L (mm)	120 Hz 20°C (tanδ %)*	120 Hz 85°C (mA)	20°C 2 minutes (µA)	( ) Represents Part Number Options
100	125	6.80	5 x 11	10	55	6.8	ESK685M100AC3(1)
100	125	10.00	5 x 11	10	65	10.0	ESK106M100AC3(1)
100	125	10.00	6.3 x 11	10	75	10.0	ESK106M100AE3(1)
100	125	22.00	6.3 x 11	10	105	22.0	ESK226M100AE3(1)
100	125	22.00	8 x 11	10	130	22.0	ESK226M100AG3(1)
100	125	33.00	8 x 11	10	140	33.0	ESK336M100AG3(1)
160	200	10.00	10 x 12	15	65	58.0	ESK106M160AH1(1)
160	200	22.00	10 x 15	20	110	115.6	ESK226M160AH2(1)
160	200	33.00	10 x 15	20	135	168.4	ESK336M160AH2(1)
160	200	33.00	10 x 20	20	150	168.4	ESK336M160AH4(1)
160	200	47.00	10 x 20	20	160	235.6	ESK476M160AH4(1)
160	200	47.00	13 x 20	15	180	235.6	ESK476M160AL3(1)
160	200	68.00	13 x 20	20	200	336.4	ESK686M160AL3(1)
160	200	100.00	13 x 25	20	250	490.0	ESK107M160AL4(1)
160	200	100.00	16 x 25	15	300	490.0	ESK107M160AM7(1)
160	200	150.00	16 x 25	20	330	730.0	ESK157M160AM7(1)
160	200	220.00	16 x 32	20	450	1,066.0	ESK227M160AM2(1)
160	200	330.00	18 x 36	20	540	1,594.0	ESK337M160AN2(1)
160	200	470.00	18 x 40	20	750	2,266.0	ESK477M160AN3(1)
160	200	470.00	22 x 40	15	900	2,266.0	ESK477M160AQ4(1)
160	200	1.00	5 x 11	20	17	14.8	ESK105M160AC3(1)
160	200	1.00	6.3 x 11	20	17	14.8	ESK105M160AE3(1)
160	200	2.20	6.3 x 11	20	26	20.6	ESK225M160AE3(1)
160	200	3.30	6.3 x 11	20	30	25.8	ESK335M160AE3(1)
160	200	4.70	6.3 x 11	20	32	32.6	ESK475M160AE3(1)
160	200	3.30	8 x 11	15	35	25.8	ESK335M160AG3(1)
160	200	10.00	8 x 11	20	50	58.0	ESK106M160AG3(1)
200	250	10.00	10 x 12	15	57	70.0	ESK106M200AH1(1)
200	250	22.00	10 x 15	20	120	142.0	ESK226M200AH2(1)
200	250	33.00	10 x 20	20	160	208.0	ESK336M200AH4(1)
200	250	47.00	10 x 20	20	170	292.0	ESK476M200AH4(1)
200	250	47.00	13 x 20	20	200	292.0	ESK476M200AL3(1)
200	250	100.00	16 x 25	20	330	610.0	ESK107M200AM7(1)
200	250	100.00	16 x 26	20	330	610.0	ESK107M200AM1(1)
200	250	220.00	16 x 32	20	505	1,330.0	ESK227M200AM2(1)
200	250	330.00	16 x 40	20	710	1,990.0	ESK337M200AM4(1)
200	250	220.00	18 x 25	20	485	1,330.0	ESK227M200AN5(1)
200	250	330.00	18 x 32	20	685	1,990.0	ESK337M200AN1(1)
200	250	220.00	18 x 36	15	600	1,330.0	ESK227M200AN2(1)
200	250	470.00	18 x 40	20	750	2,830.0	ESK477M200AN3(1)
200	250	330.00	22 x 40	20	840	1,990.0	ESK337M200AQ4(1)
200	250	1.00	5 x 11	20	19	16.0	ESK105M200AC3(1)
200	250	2.20	6.3 x 11	20	22	23.2	ESK225M200AE3(1)
200	250	3.30	6.3 x 11	20	30	29.8	ESK335M200AE3(1)
200	250	4.70	6.3 x 11	20	35	38.2	ESK475M200AE3(1)
200	250	3.30	8 x 11	15	37	29.8	ESK335M200AG3(1)
200	250	4.70	8 x 11	15	36	38.2	ESK475M200AG3(1)
200	250	6.80	8 x 11	20	40	50.8	ESK685M200AG3(1)
200	250	10.00	8 x 11	20	45	70.0	ESK106M200AG3(1)
250	300	10.00	10 x 12	15	70	85.0	ESK106M250AH1(1)
250	300	10.00	10 x 12.5	20	65	85.0	ESK106M250AH9(1)
250	300	4.70	10 x 15	20	45	45.3	ESK475M250AH2(1)
250	300	22.00	10 x 20	20	130	175.0	ESK226M250AH4(1)
250	300	33.00	13 x 20	20	140	257.5	ESK336M250AL3(1)
250	300	33.00	13 x 25	15	160	257.5	ESK336M250AL4(1)
250	300	47.00	13 x 25	20	210	362.5	ESK476M250AL4(1)
250	300	100.00	16 x 25	20	250	760.0	ESK107M250AM7(1)
Rated Voltage	Surge Voltage	Rated Capacitance	Case Size	DF	RC	LC	Part Number

(1) Insert packaging code. See Ordering Options Table for available options.

** When capacitance exceeds 1,000 µF, the DF value (%) is increased by 2% for every additional 1,000 µF.*

Table 1 – Ratings & Part Number Reference cont.

Rated Voltage	Surge Voltage	Rated Capacitance	Case Size	DF	RC	LC	Part Number
(VDC)	(VDC)	120 Hz 20°C (µF)	D x L (mm)	120 Hz 20°C (tanδ %)*	120 Hz 85°C (mA)	20°C 2 minutes (µA)	( ) Represents Part Number Options
250	300	150.00	16 x 32	20	330	1,135.0	ESK157M250AM2(1)
250	300	100.00	18 x 40	20	320	760.0	ESK107M250AN3(1)
250	300	220.00	18 x 40	20	540	1,660.0	ESK227M250AN3(1)
250	300	220.00	22 x 40	20	630	1,660.0	ESK227M250AQ4(1)
250	300	1.00	5 x 11	20	17	17.5	ESK105M250AC3(1)
250	300	1.00	6.3 x 11	20	19	17.5	ESK105M250AE3(1)
250	300	2.20	6.3 x 11	20	24	26.5	ESK225M250AE3(1)
250	300	2.20	8 x 11	20	30	26.5	ESK225M250AG3(1)
250	300	3.30	8 x 11	20	30	34.8	ESK335M250AG3(1)
250	300	4.70	8 x 11	20	36	45.3	ESK475M250AG3(1)
250	300	6.80	8 x 11	20	40	61.0	ESK685M250AG3(1)
350	400	3.30	10 x 12	20	39	44.7	ESK335M350AH1(1)
350	400	4.70	10 x 12	20	39	59.4	ESK475M350AH1(1)
350	400	6.80	10 x 12	24	39	81.4	ESK685M350AH1(1)
350	400	4.70	10 x 12.5	24	39	59.4	ESK475M350AH9(1)
350	400	10.00	10 x 15	24	70	115.0	ESK106M350AH2(1)
350	400	22.00	13 x 20	24	130	241.0	ESK226M350AL3(1)
350	400	33.00	13 x 25	24	170	356.5	ESK336M350AL4(1)
350	400	47.00	16 x 25	24	220	503.5	ESK476M350AM7(1)
350	400	100.00	16 x 36	24	620	1,060.0	ESK107M350AM3(1)
350	400	100.00	18 x 32	24	300	1,060.0	ESK107M350AN1(1)
350	400	100.00	18 x 36	20	360	1,060.0	ESK107M350AN2(1)
350	400	220.00	22 x 40	24	470	2,320.0	ESK227M350AQ4(1)
350	400	1.00	6.3 x 11	24	19	20.5	ESK105M350AE3(1)
350	400	2.20	8 x 11	24	33	33.1	ESK225M350AG3(1)
350	400	3.30	8 x 11	24	33	44.7	ESK335M350AG3(1)
400	450	3.30	10 x 12	20	40	49.6	ESK335M400AH1(1)
400	450	4.70	10 x 12.5	24	42	66.4	ESK475M400AH9(1)
400	450	6.80	10 x 12.5	24	45	91.6	ESK685M400AH9(1)
400	450	4.70	10 x 15	20	45	66.4	ESK475M400AH2(1)
400	450	10.00	10 x 15	24	50	130.0	ESK106M400AH2(1)
400	450	10.00	10 x 20	20	56	130.0	ESK106M400AH4(1)
400	450	22.00	13 x 20	24	100	274.0	ESK226M400AL3(1)
400	450	22.00	13 x 25	20	110	274.0	ESK226M400AL4(1)
400	450	33.00	13 x 25	24	140	406.0	ESK336M400AL4(1)
400	450	33.00	16 x 25	20	170	406.0	ESK336M400AM7(1)
400	450	47.00	16 x 25	24	180	574.0	ESK476M400AM7(1)
400	450	47.00	16 x 26	24	180	574.0	ESK476M400AM1(1)
400	450	68.00	16 x 32	24	250	826.0	ESK686M400AM2(1)
400	450	68.00	18 x 25	24	220	826.0	ESK686M400AN5(1)
400	450	100.00	18 x 32	24	320	1,210.0	ESK107M400AN1(1)
400	450	100.00	18 x 36	20	360	1,210.0	ESK107M400AN2(1)
400	450	150.00	18 x 40	24	420	1,810.0	ESK157M400AN3(1)
400	450	1.00	6.3 x 11	24	16	22.0	ESK105M400AE3(1)
400	450	2.20	6.3 x 11	24	20	36.4	ESK225M400AE3(1)
400	450	1.00	8 x 11	24	19	22.0	ESK105M400AG3(1)
400	450	2.20	8 x 11	24	26	36.4	ESK225M400AG3(1)
400	450	3.30	8 x 11	24	35	49.6	ESK335M400AG3(1)
400	450	4.70	8 x 11	24	38	66.4	ESK475M400AG3(1)
400	450	6.80	8 x 15	24	42	91.6	ESK685M400AG4(1)
450	500	2.20	10 x 12	20	33	39.7	ESK225M450AH1(1)
450	500	2.20	10 x 12.5	24	33	39.7	ESK225M450AH9(1)
450	500	3.30	10 x 12.5	24	40	54.6	ESK335M450AH9(1)
450	500	4.70	10 x 12.5	24	45	73.5	ESK475M450AH9(1)
450	500	3.30	10 x 15	20	42	54.6	ESK335M450AH2(1)
450	500	4.70	10 x 15	20	50	73.5	ESK475M450AH2(1)
450	500	6.80	10 x 15	24	50	101.8	ESK685M450AH2(1)
Rated Voltage	Surge Voltage	Rated Capacitance	Case Size	DF	RC	LC	Part Number

(1) Insert packaging code. See Ordering Options Table for available options.

** When capacitance exceeds 1,000 µF, the DF value (%) is increased by 2% for every additional 1,000 µF.*

Table 1 – Ratings & Part Number Reference cont.

Rated Voltage	Surge Voltage	Rated Capacitance	Case Size	DF	RC	LC	Part Number
(VDC)	(VDC)	120 Hz 20°C (µF)	D x L (mm)	120 Hz 20°C (tanδ %)*	120 Hz 85°C (mA)	20°C 2 minutes (µA)	( ) Represents Part Number Options
450	500	10.00	10 x 20	24	58	145.0	ESK106M450AH4(1)
450	500	10.00	13 x 20	24	60	145.0	ESK106M450AL3(1)
450	500	22.00	13 x 25	24	98	307.0	ESK226M450AL4(1)
450	500	22.00	16 x 25	20	130	307.0	ESK226M450AM7(1)
450	500	33.00	16 x 25	24	145	455.5	ESK336M450AM7(1)
450	500	22.00	16 x 32	24	120	307.0	ESK226M450AM2(1)
450	500	47.00	16 x 32	24	165	644.5	ESK476M450AM2(1)
450	500	33.00	16 x 36	20	180	455.5	ESK336M450AM3(1)
450	500	47.00	18 x 25	24	160	644.5	ESK476M450AN5(1)
450	500	68.00	18 x 25	24	265	928.0	ESK686M450AN5(1)
450	500	47.00	18 x 36	20	200	644.5	ESK476M450AN2(1)
450	500	100.00	18 x 40	24	330	1,360.0	ESK107M450AN3(1)
450	500	150.00	22 x 35	24	420	2,035.0	ESK157M450AQ3(1)
450	500	100.00	22 x 40	20	370	1,360.0	ESK107M450AQ4(1)
500	550	2.20	10 x 12.5	24	33	43.0	ESK225M500AH9(1)
500	550	3.30	10 x 15	24	43	59.5	ESK335M500AH2(1)
500	550	6.80	10 x 20	24	70	112.0	ESK685M500AH4(1)
500	550	10.00	13 x 20	24	93	160.0	ESK106M500AL3(1)
500	550	22.00	16 x 25	24	105	340.0	ESK226M500AM7(1)
500	550	33.00	16 x 25	24	200	505.0	ESK336M500AM7(1)
500	550	47.00	18 x 32	24	185	715.0	ESK476M500AN1(1)
500	550	68.00	18 x 36	24	370	1,030.0	ESK686M500AN2(1)
Rated Voltage	Surge Voltage	Rated Capacitance	Case Size	DF	RC	LC	Part Number

(1) Insert packaging code. See Ordering Options Table for available options.
** When capacitance exceeds 1,000 µF, the DF value (%) is increased by 2% for every additional 1,000 µF.*

Mounting Positions (Safety Vent)

In operation, electrolytic capacitors will always conduct a leakage current, which causes electrolysis. The oxygen produced by electrolysis will regenerate the dielectric layer but, at the same time, the hydrogen released may cause the internal pressure of the capacitor to increase. The overpressure vent, or safety vent, ensures that the gas can escape when the pressure reaches a certain value. All mounting positions must allow the safety vent to work properly.

Installing

- As a general principle, lower-use temperatures result in a longer, useful life of the capacitor. For this reason, it should be ensured that electrolytic capacitors are placed away from heat-emitting components. Adequate space should be allowed between components for cooling air to circulate, particularly when high ripple current loads are applied. In any case, the maximum category temperature must not be exceeded.
- Do not deform the case of the capacitors or use capacitors with a deformed case.
- Verify that the connections of the capacitors are able to insert on the board without excessive mechanical force.
- If the capacitors require mounting through additional means, the recommended mounting accessories shall be used.
- Verify the correct polarization of the capacitor on the board.
- Verify that the space around the pressure relief device is according to the following guideline:

Case Diameter	Space Around Safety Vent
≤ 16 mm	> 2 mm
> 16 to ≤ 40 mm	> 3 mm
> 40 mm	> 5 mm

It is recommended that capacitors always be mounted with the safety device uppermost or in the upper part of the capacitor.

- If the capacitors are stored for a long time, the leakage current must be verified. If the leakage current is superior to the value listed in this catalog, the capacitors must be reformed. In this case, they can be reformed by application of the rated voltage through a series resistor approximately 1 kΩ for capacitors with V_R ≤ 160 V (5 W resistor) and 10 kΩ for the other rated voltages.
- In the case of capacitors connected in a series, a suitable voltage sharing must be used.
  In the case of balancing resistors, the approximate resistance value can be calculated as: R = 60/C.

KEMET recommends, nevertheless, to ensure that the voltage across each capacitor does not exceed its rated voltage.

Application & Operation Guidelines

Electrical Ratings:
Capacitance (ESC)

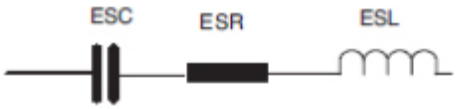

Simplified equivalent circuit diagram of an electrolytic capacitor

The capacitive component of the equivalent series circuit, (equivalent series capacitance - ESC), is determined by applying an alternate voltage of ≤ 0.5 V at a frequency of 120 or 100 Hz and 20°C (IEC 384-1, 384-4).

Temperature Dependence of the Capacitance
Capacitance of an electrolytic capacitor depends upon temperature: with decreasing temperature the viscosity of the electrolyte increases, thereby reducing its conductivity.
Capacitance will decrease if temperature decreases. Furthermore, temperature drifts cause armature dilatation and, therefore, capacitance changes (up to 20% depending on the series considered, from 0 to 80°C). This phenomenon is more evident for electrolytic capacitors than for other types.

Frequency Dependence of the Capacitance
Effective capacitance value is derived from the impedance curve, as long as impedance is still in the range where the capacitance component is dominant.

$$C = \frac{1}{2\pi fZ}$$

C = capacitance (F)
f = frequency (Hz)
Z = impedance (Ω)

Dissipation Factor tan δ (DF)
Dissipation Factor tan δ is the ratio between the active and reactive power for a sinusoidal waveform voltage. It can be thought of as a measurement of the gap between an actual and ideal capacitor.

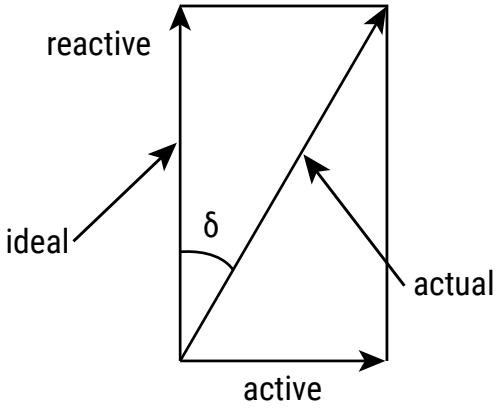

Tan δ is measured with the same set-up used for the series capacitance ESC.
Tan δ = ω x ESC x ESR where:
ESC = Equivalent series capacitance
ESR = Equivalent series resistance

Application & Operation Guidelines cont.

Equivalent Series Inductance (ESL)
Equivalent series inductance or self inductance results from the terminal configuration and internal design of the capacitor.

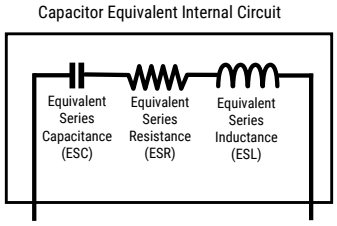

Equivalent Series Resistance (ESR)
Equivalent series resistance is the resistive component of the equivalent series circuit. ESR value depends on frequency and temperature, and is related to the tan δ by the following equation:

$$ESR = \frac{\tan \delta}{2\pi f\, ESC}$$

ESR = Equivalent series resistance (Ω)
tan δ = Dissipation factor
ESC = Equivalent series capacitance (F)
f = Frequency (Hz)

Tolerance limits of the rated capacitance must be taken into account when calculating this value.

Impedance (Z)
Impedance of an electrolytic capacitor results from a circuit formed by the following individual equivalent series components:

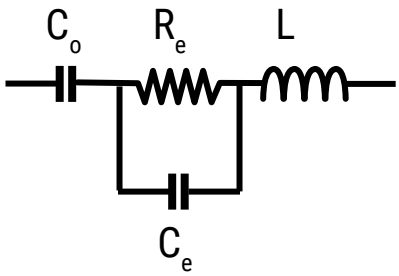

C_o = Aluminum oxide capacitance (surface and thickness of the dielectric.)
R_e = Resistance of electrolyte and paper mixture (other resistances not depending on the frequency are not considered: tabs, plates, etc.)
C_e = Electrolyte soaked paper capacitance.
L = Inductive reactance of the capacitor winding and terminals.
Impedance of an electrolytic capacitor is not a constant quantity that retains its value under all conditions; it changes depending on frequency and temperature.
Impedance as a function of frequency (sinusoidal waveform) for a certain temperature can be represented as follows:

Application & Operation Guidelines cont.

Impedance (Z) cont.

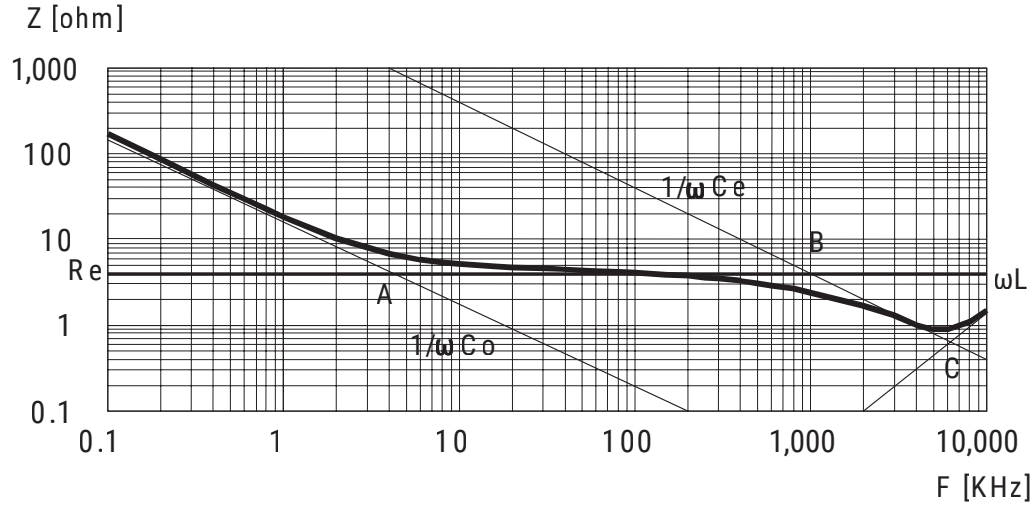

- Capacitive reactance predominates at low frequencies.
- With increasing frequency, capacitive reactance Xc = $1/\omega C_o$ decreases until it reaches the order of magnitude of electrolyte resistance R_e(A)
- At even higher frequencies, resistance of the electrolyte predominates: Z = R_e (A - B)
- When the capacitor's resonance frequency is reached (ω_0), capacitive and inductive reactance mutually cancel each other $1/\omega C_e = \omega L$, $\omega_0 = 1/SQR(LC_e)$
- Above this frequency, inductive reactance of the winding and its terminals (XL = Z = ωL) becomes effective and leads to an increase in impedance

Generally speaking, it can be estimated that $C_e \approx 0.01\ C_o$.

Impedance as a function of frequency (sinusoidal waveform) for different temperature values can be represented as follows (typical values):

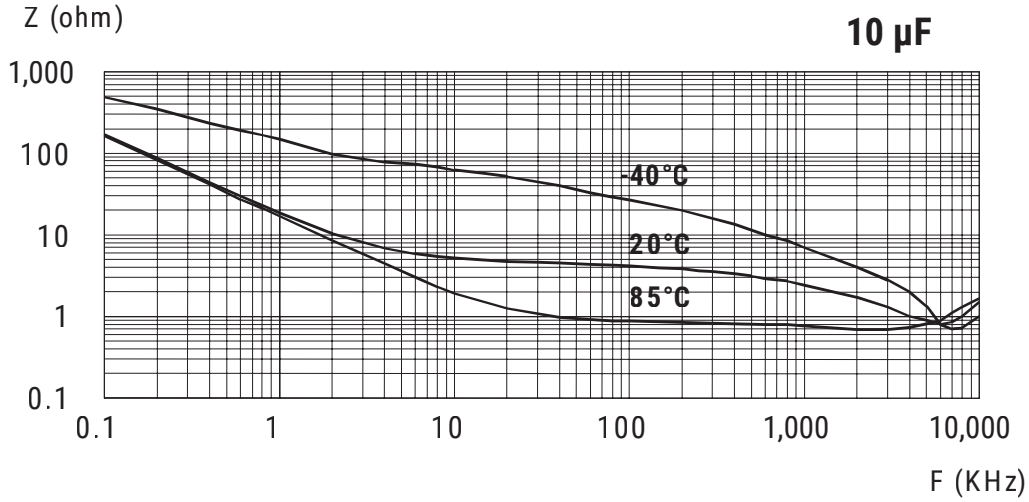

R_e is the most temperature-dependent component of an electrolytic capacitor equivalent circuit. Electrolyte resistivity will decrease if temperature rises.
In order to obtain a low impedance value throughout the temperature range, R_e must be as little as possible. However, R_e values that are too low indicate a very aggressive electrolyte, resulting in a shorter life of the electrolytic capacitor at high temperatures. A compromise must be reached.

Application & Operation Guidelines cont.

Leakage Current (LC)
Due to the aluminum oxide layer that serves as a dielectric, a small current will continue to flow even after a DC voltage has been applied for long periods. This current is called leakage current.

A high leakage current flows after applying voltage to the capacitor then decreases in a few minutes, for example, after prolonged storage without any applied voltage. In the course of continuous operation, the leakage current will decrease and reach an almost constant value.

After a voltage-free storage the oxide layer may deteriorate, especially at a high temperature. Since there are no leakage currents to transport oxygen ions to the anode, the oxide layer is not regenerated. The result is that a higher than normal leakage current will flow when voltage is applied after prolonged storage.

As the oxide layer is regenerated in use, the leakage current will gradually decrease to its normal level.
The relationship between the leakage current and voltage applied at constant temperature can be shown schematically as follows:

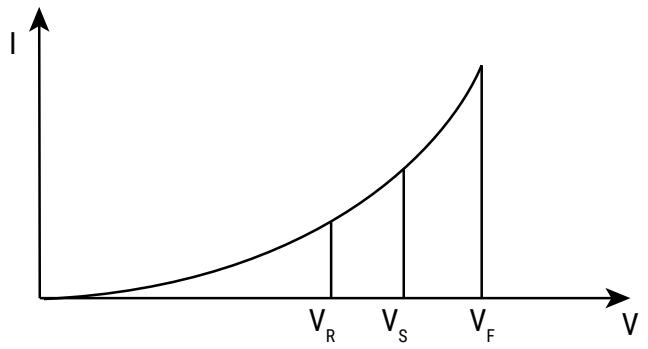

Where:
V_F = Forming voltage
If this level is exceeded, a large quantity of heat and gas will be generated and the capacitor could be damaged.
V_R = Rated voltage
This level represents the top of the linear part of the curve.
V_S = Surge voltage
This lies between V_R and V_F. The capacitor can be subjected to V_S for short periods only.

Electrolytic capacitors are subjected to a reforming process before acceptance testing. The purpose of this preconditioning is to ensure that the same initial conditions are maintained when comparing different products.

Ripple Current (RC)
The maximum ripple current value depends on:
- Ambient temperature
- Surface area of the capacitor (heat dissipation area)
  tan δ or ESR
- Frequency

The capacitor's life depends on the thermal stress.

Application & Operation Guidelines cont.

Frequency Dependence of the Ripple Current
ESR and, thus, the tan δ depend on the frequency of the applied voltage. This indicates that the allowed ripple current is also a function of the frequency.

Temperature Dependence of the Ripple Current
The data sheet specifies maximum ripple current at the upper category temperature for each capacitor.

Expected Life Calculation
Expected life depends on operating temperature according to the following formula: $L = Lo \times 2^{(To-T)/10}$
Where:

L:	Expected life
Lo:	Load life at a maximum permissible operating temperature
T:	Actual operating temperature
To:	Maximum permissible operating temperature

This formula is applicable between 40°C and To.

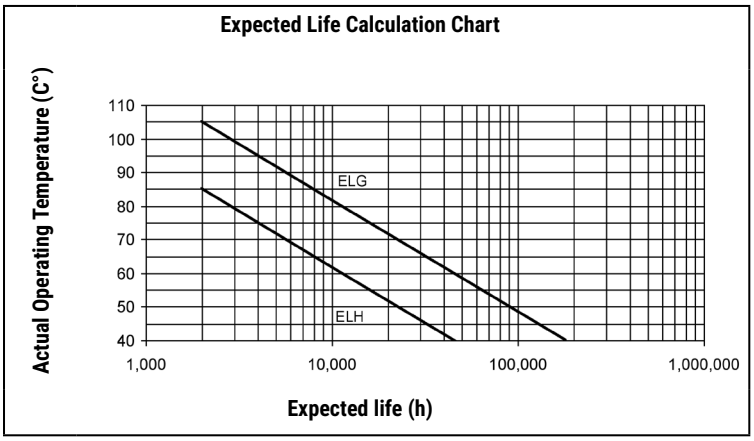

Marking

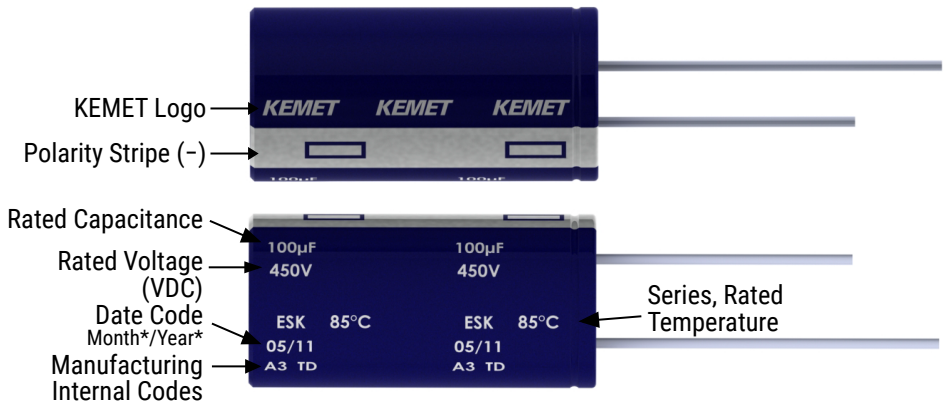

*Y = Year

Code	01	02	03	04	05	06	07	08	09	20	21	22	23	24	25
Year	2011	2012	2013	2014	2015	2016	2017	2018	2019	2020	2021	2022	2023	2024	2025

*M = Month

Code	01	02	03	04	05	06	07	08	09	10	11	12
Month	1	2	3	4	5	6	7	8	9	10	11	12

** Image for reference only. A slight change in the layout can occur, not affecting the marking content. This change will not impact the product's form, fit, or function, as the products remain equivalent in physical, mechanical, quality, and reliability characteristics.

Construction

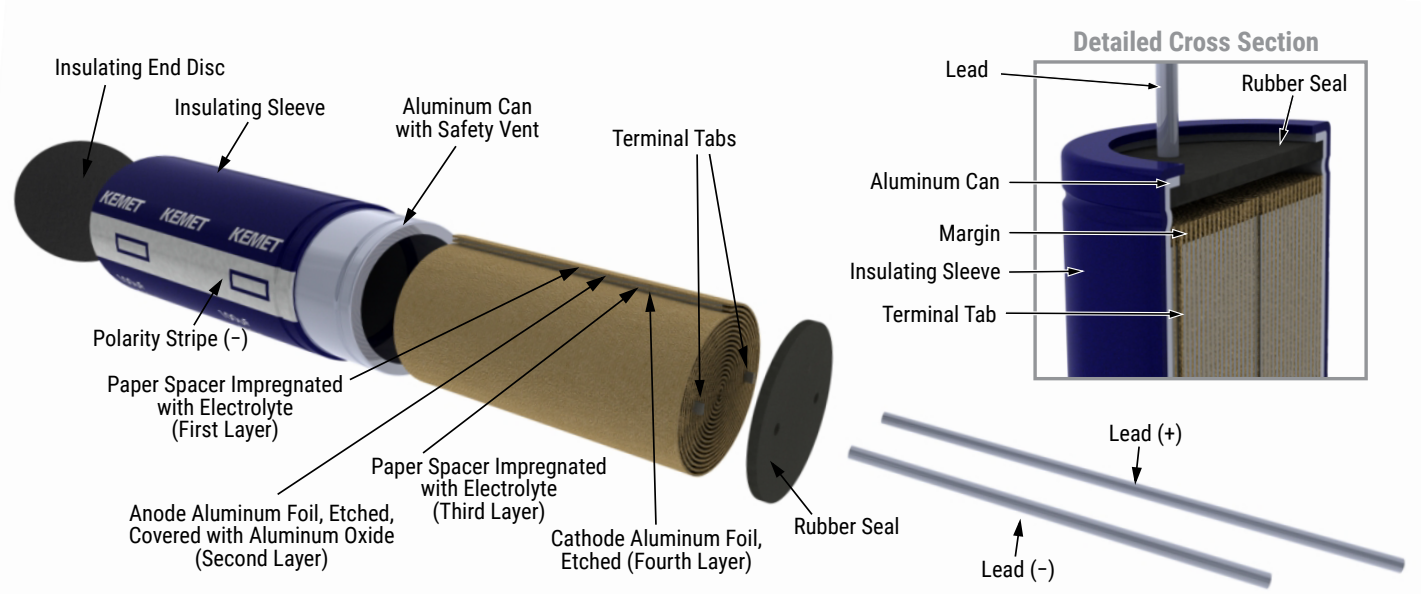

Taping for Automatic Insertion Machines

Formed to 2.5 mm
(Lead and packaging code LA and FA)

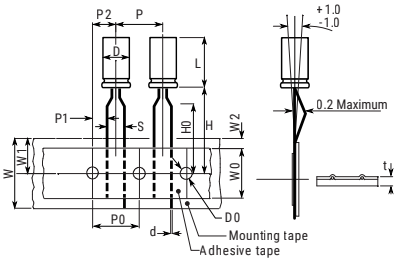

Formed to 5 mm
(Lead and packaging code JA and DA)

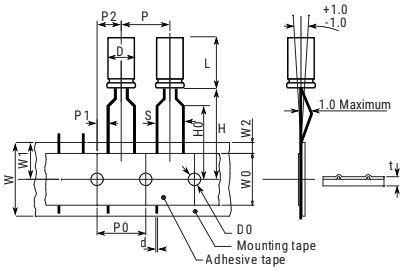

Straight Leads (Diameter: 4 – 8 mm)
Lead and packaging code EA and KA

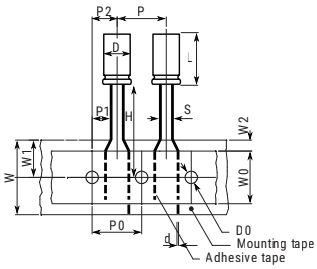

Straight Leads (Diameter > 8)
Lead and packaging code EA and KA

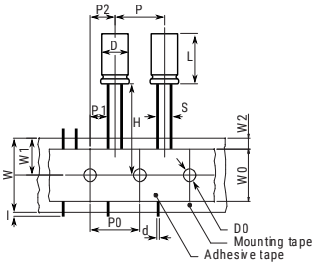

Dimensions (mm)	D	L	S	d	P	P0	P1	P2	W	W0	W1	W2	H0	H1	I	D0	t
Tolerance	+0.5		+0.8/−0.2	±0.05	±1.0	±0.3	±0.7	±1.3	+1/−0.5	±0.5	Maximum	Maximum	±0.75	±0.5	Maximum	±0.2	±0.2
Formed to 2.5 mm	4	5 – 7	2.5	0.45	12.7	12.7	5.1	6.35	18	12	11	3	16.0	18.5		4	0.7
	5	≤ 7	2.5	0.45	12.7	12.7	5.1	6.35	18	12	11	3	16.0	18.5		4	0.7
		> 7	2.5	0.50	12.7	12.7	5.1	6.35	18	12	11	3	16.0	18.5		4	0.7
Formed to 5 mm	4	5 – 7	5.0	0.45	12.7	12.7	3.85	6.35	18	12	11	3	16.0	18.5		4	0.7
	5	≤ 7	5.0	0.45	12.7	12.7	3.85	6.35	18	12	11	3	16.0	18.5		4	0.7
		>7	5.0	0.50	12.7	12.7	3.85	6.35	18	12	11	3	16.0	18.5		4	0.7
	6	≤ 7	5.0	0.50	12.7	12.7	3.85	6.35	18	12	11	3	16.0	18.5		4	0.7
		> 7	5.0	0.50	12.7	12.7	3.85	6.35	18	12	11	3	16.0	18.5		4	0.7
	8	≤ 7	5.0	0.50	12.7	12.7	3.85	6.35	18	12	11	3	16.0	18.5		4	0.7
		> 7	5.0	0.50	12.7	12.7	3.85	6.35	18	12	11	3	16.0	18.5		4	0.7
Straight leads	4	5 – 7	1.5	0.45	12.7	12.7	5.6	6.35	18	12	11	3	18.5			4	0.7
	5	≤ 7	2.0	0.45	12.7	12.7	5.35	6.35	18	12	11	3	18.5			4	0.7
		> 7	2.0	0.50	12.7	12.7	5.35	6.35	18	12	11	3	18.5			4	0.7
	6	≤ 7	2.5	0.50	12.7	12.7	5.1	6.35	18	12	11	3	18.5			4	0.7
		> 7	2.5	0.50	12.7	12.7	5.1	6.35	18	12	11	3	18.5			4	0.7
	8	≤ 7	3.5	0.50	12.7	12.7	4.6	6.35	18	12	11	3	18.5			4	0.7
		> 7	3.5	0.50	12.7	12.7	4.6	6.35	18	12	11	3	18.5			4	0.7
	10	≤ 20	5.0	0.60	12.7	12.7	3.85	6.35	18	12	11	3	18.5		1	4	1.0

Lead Taping & Packaging

Ammo Box

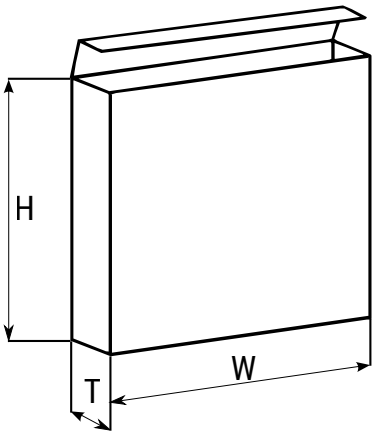

Reel

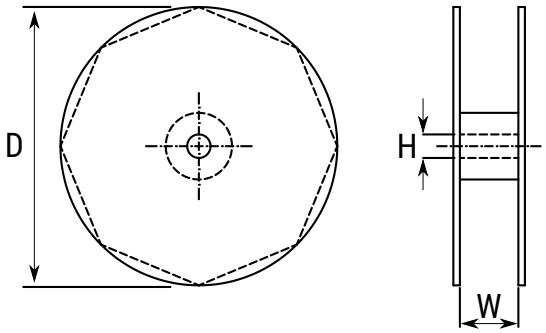

Diameter	Length	Ammo			Reel		
		H	W	T	D	H	W
			Maximum	Maximum	±2	±0.5	+1/-0.1
4	All	230	340	42	350	30	50
5	≤ 7	230	340	42			
5	11	275	340	42			
6.3	≤ 7	235	340	45			
6.3	11	230	340	48			
8	≤ 7	270	340	48			
8	11	235	340	48			
8	>11 ≤ 20	240	340	57			
10	≤ 13	250	340	52			
10	>13 ≤ 20	256	340	57			
10	>20	250	340	60	NA	NA	NA
12	All	270	340	57			
13	All	285	340	62			
16	All	265	340	62			
18	All	288	340	65			

Construction Data

The manufacturing process begins with the anode foil being electrochemically etched to increase the surface area and then "formed" to produce the aluminum oxide layer. Both the anode and cathode foils are then interleaved with absorbent paper and wound into a cylinder. During the winding process, aluminum tabs are attached to each foil to provide the electrical contact.

The deck, complete with terminals, is attached to the tabs and then folded down to rest on top of the winding. The complete winding is impregnated with electrolyte before being housed in a suitable container, usually an aluminum can, and sealed. Throughout the process, all materials inside the housing must be maintained at the highest purity and be compatible with the electrolyte.

Each capacitor is aged and tested before being sleeved and packed. The purpose of aging is to repair any damage in the oxide layer and thus reduce the leakage current to a very low level. Aging is normally carried out at the rated temperature of the capacitor and is accomplished by applying voltage to the device while carefully controlling the supply current. The process may take several hours to complete.

Damage to the oxide layer can occur due to variety of reasons:
- Slitting of the anode foil after forming
- Attaching the tabs to the anode foil
- Minor mechanical damage caused during winding

A sample from each batch is taken by the quality department after completion of the production process. This sample size is controlled by the use of recognized sampling tables defined in BS 6001.

The following tests are applied and may be varied at the request of the customer. In this case the batch, or special procedure, will determine the course of action.

Electrical:
- Leakage current
- Capacitance
- ESR
- Impedance
- Tan Delta

Mechanical/Visual:
- Overall dimensions
- Torque test of mounting stud
- Print detail
- Box labels
- Packaging, including packed quantity

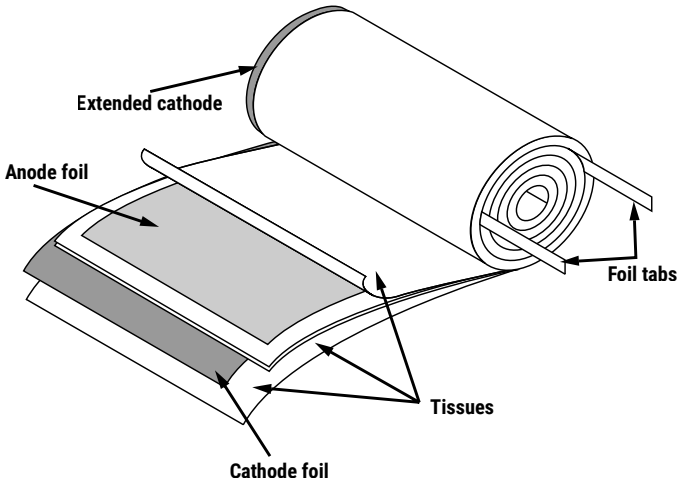

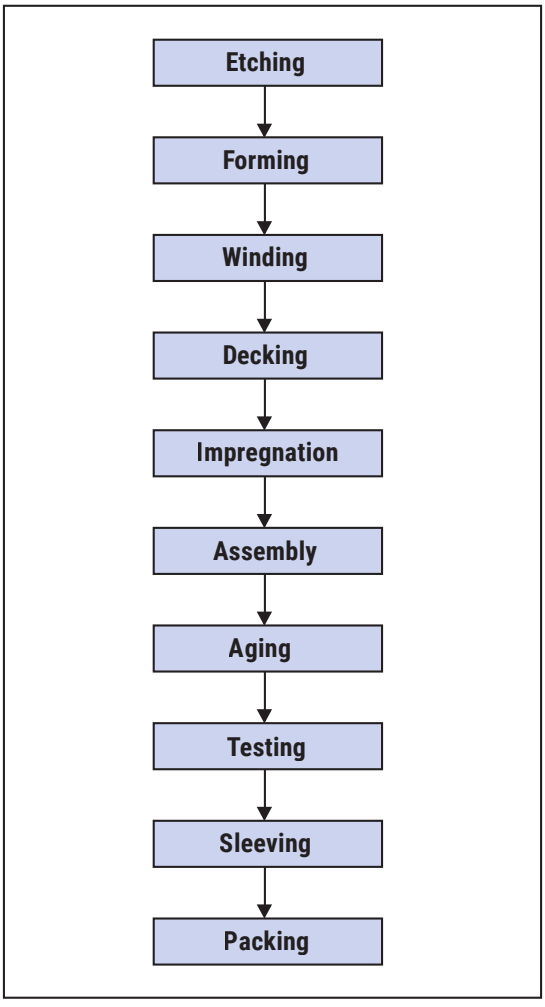

KEMET Electronics Corporation Sales Offices

For a complete list of our global sales offices, please visit https://www.yageogroup.com/SalesResources/SalesOffices

Disclaimer

YAGEO Corporation and its affiliates do not recommend the use of commercial or automotive grade products for high reliability applications or manned space flight.

All product specifications, statements, information and data (collectively, the "Information") in this datasheet are subject to change. The customer is responsible for checking and verifying the extent to which the Information contained in this publication is applicable to an order at the time the order is placed. All Information given herein is believed to be accurate and reliable, but it is presented without guarantee, warranty, or responsibility of any kind, expressed or implied.

Statements of suitability for certain applications are based on KEMET Electronics Corporation's ("KEMET") knowledge of typical operating conditions for such applications, but are not intended to constitute – and KEMET specifically disclaims – any warranty concerning suitability for a specific customer application or use. The Information is intended for use only by customers who have the requisite experience and capability to determine the correct products for their application. Any technical advice inferred from this Information or otherwise provided by KEMET with reference to the use of KEMET's products is given gratis, and KEMET assumes no obligation or liability for the advice given or results obtained.

Although KEMET designs and manufactures its products to the most stringent quality and safety standards, given the current state of the art, isolated component failures may still occur. Accordingly, customer applications which require a high degree of reliability or safety should employ suitable designs or other safeguards (such as installation of protective circuitry or redundancies) in order to ensure that the failure of an electrical component does not result in a risk of personal injury or property damage.

Although all product–related warnings, cautions and notes must be observed, the customer should not assume that all safety measures are indicated or that other measures may not be required.

KEMET requires its products to be packaged and shipped on pallets. This is because KEMET's products are specifically designed to be packed onto pallets during shipment. If for any reason, the products are removed from pallets by the shipping party and shipped to the end customer, then additional external protection is required. In this instance, an external box with two carton layers and an upwards orientation sticker must be used by the shipping party, with the empty space filled with filling material, and afterwards sealing the box. If this packing and packaging guideline is not followed by the shipping party, the shipping party, and not KEMET, will be held responsible for any packaging, packing and/or product damages upon delivery of the products to the end customer. KEMET hereby disclaims any liability for damages to the products or otherwise that have been, or threaten to be, inflicted, result from or are in any way related to the packaging, packing or damage by the shipping party in contravention of the packing and packaging guidelines herein.

KEMET is a registered trademark of KEMET Electronics Corporation.