830/831/834 Series Circuit Board Mount Enclosed Fuseholders

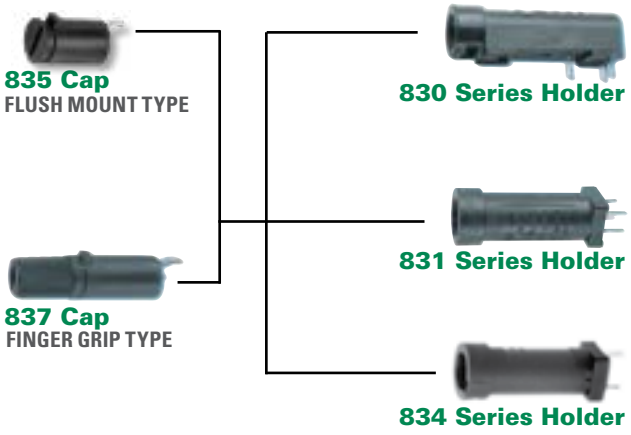

Product Dimensions (mm)

830 Series

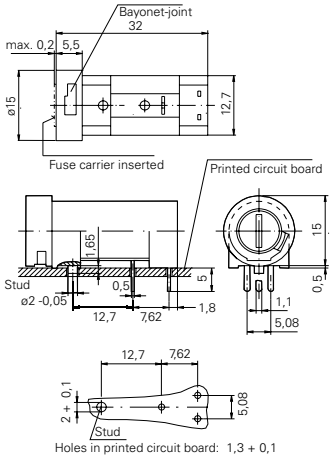

831 Series

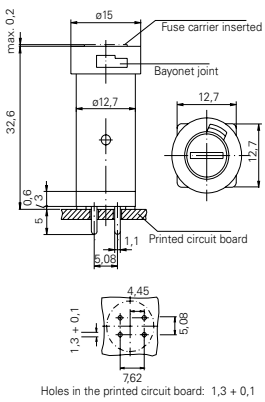

834 Series

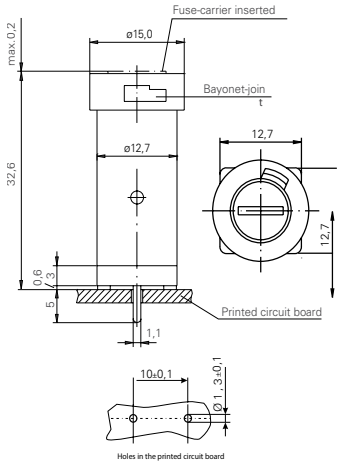

835 Cap

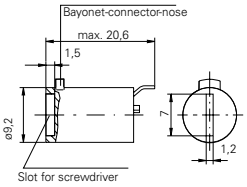

837 Cap

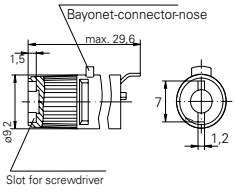

Product Characteristics

	830 Series	831 Series	834 Series
Compatible Fuse Types	5×20 mm		
Materials	**Holder/Cap:** Black Thermoplastic, UL94 V-0		
	Metal Parts: Copper alloy, corrosion protected		
	Terminals: Solderable, tinned		
Electrical Data (23 °C)	**Rated Voltage:** 250 V		
	Rated Current: 6.3 A (VDE) 16 A (UL/CSA)		
	Rated Power: 1.6 W (VDE)	**Rated Power:** 2.5 W (VDE)	**Rated Power:** 2.5 W
Mounting	(3) Solder pins 0.5 mm×1.1 mm and plastic stud. The pins spaced at 5.08 mm form a common connection.	(4) Solder pins 0.5 mm×1.1 mm The pins spaced at 5.08 mm form a common connection.	(2) Solder pins 0.5 mm×1.1 mm
Ingress Protection and Category	IP 40 (IEC 60529) PC2 (IEC 60127-6)		
Operating Temperature*	-25 °C to 70 °C		
Climatic Test	-25 °C/+70 °C/21 days (IEC 60068-2-1...3)		
Stock Conditions	+10 °C to +60 °C relative humidity ≤ 75% yearly average, without dew, maximum value for 30 days - 95%		
Vibration Resistance	24 cycles at 15 min. each (IEC 60068-2-6) 10–60 Hz at 0.75 mm amplitude 60–2000 Hz at 10g acceleration		
Contact Resistance	≤ 5 mΩ		
Dielectric Strength	> 1.5 kV		
Impulse Voltage	4 kV, 50 Hz, 1 min., dry		4 kV with 1,2 µs/50 µs
Insulation Resistance	> 10^3 MΩ (500 VDC, 1 min.)		
Solderability	235 °C, 3 sec. (Wave) 350 °C, 1 sec. (Soldering Iron)		235 °C, 2 sec. (Soldering bath) (IEC 60068-2-20) 350 °C, 3 sec. (Soldering Iron) (IEC 60068-2-20)
Soldering Heat Resistance	260 °C, 5 sec. (IEC 60068-2-20)		260 °C, 5 sec. (Soldering bath) (IEC 60068-2-20)
Minimum Cross Section	Conducting path - 0.2mm²		
Marking	830, 250 V, Approvals	831, 250 V, Approvals	834, 250 V, Approvals
Unit Weight	4.4 g (Holder) / 1.6 g (835) / 2.2 g (837)	4.1 g (Holder) / 1.6g (835) / 2.2g (837)	3,5 g (834)/1,6 g (835)/2,2 g (837)

* Refer to Fuseology for information on proper fuseholder re-rating.

© 2021 Littelfuse, Inc.
Application testing is strongly recommended. Specifications are subject to change without notice.
Revised: June 7, 2021 12:32 PM

Cartridge Fuseholders

Enclosed Fuseholders > Circuit Board Mounted

Agency Approval

Agency	Agency File/Certificate Number		
	830 Series	**831 Series**	**834 Series**
DVE	120623	123441	6913
cULus	E70164		
CSA	47574		

Ordering Information

Ordering PN	Description	Packaging
Fuseholder		
83000000005	ACS 5×20 mm Fuseholder 830 Series for 250 V	Bulk/100 pcs
83100000005	ACS 5×20 mm Fuseholder 831 Series for 250 V	Bulk/100 pcs
83400000005	ACS 5×20 mm Fuseholder 834 Series for 250 V	Bulk/100 pcs
Fuseholder Cap		
83500000005	ACS 5×20 mm Fuseholder CAP 835 Series	Bulk/100 pcs
83700000005	ACS 5×20 mm Fuseholder CAP 837 Series	Bulk/100 pcs

Additional Information

Datasheet 830 Series
Resources 830 Series
Samples 830 Series
Datasheet 831 Series
Resources 831 Series
Samples 831 Series
Datasheet 834 Series
Resources 834 Series
Samples 834 Series

Disclaimer Notice - Information furnished is believed to be accurate and reliable. However, users should independently evaluate the suitability of and test each product selected for their own applications. Littelfuse products are not designed for, and may not be used in, all applications. Read complete Disclaimer Notice at: www.littelfuse.com/disclaimer-electronics.

© 2021 Littelfuse, Inc.
Specifications are subject to change without notice.
Revised: June 7, 2021 12:32 PM