R60, Radial, 10.0 – 37.5 mm Lead Spacing, 50 – 1,000 VDC (Automotive Grade)

General Purpose Metallized Polyester Film Capacitors

Overview

The R60 is constructed of metallized polyester film (wound or stacked technology) with radial leads of tinned wire. Radial leads are electrically welded to the contact metal layer on the ends of the capacitor winding. The capacitor is encapsulated with thermosetting resin in a box material meeting the UL 94V–0 requirements.

R60 components (up to lead spacing 22.5 mm) meet the demanding Automotive Electronics Council's AEC–Q200 qualification requirements.

Applications

Typical applications include blocking, coupling, decoupling, bypassing and interference suppression in low voltage applications such as automotive. Not suitable for across-the-line application (see suppressor capacitors).

Benefits

- Voltage range: 50 – 1,000 VDC
- Capacitance range: 0.001 – 150.0 µF
- Lead spacing: 10.0 – 37.5 mm
- Capacitance tolerance: ±5%, ±10%, ±20%
- Climatic category: 55/105/56
- Operating temperature range of −55°C to +105°C
- RoHS compliance and lead (Pb)-free terminations
- Tape and reel packaging in accordance with IEC 60286–2
- Self-healing
- Automotive (AEC–Q200) grades up to pitch 22.5 mm

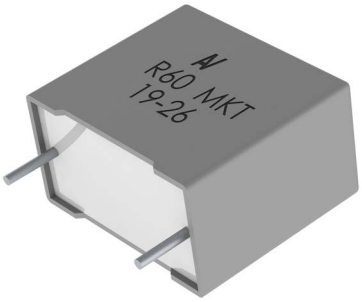

Part Number System

R60	M	F	2470	AA	60	K
Series	Rated Voltage (VDC)	Lead Spacing (mm)	Capacitance Code (pF)	Packaging	Internal Use	Capacitance Tolerance
Metallized Polyester	C = 50 D = 63 E = 100 G = 160 I = 250 M = 400 P = 630 Q = 1,000	F = 10.0 I = 15.0 N = 22.5 R = 27.5 W = 37.5	The last three digits represent significant figures. First digit specifies the number of zeros to be added.	See Ordering Options Table	00 01 30 40 50 6A L0 L1	J = ±5% K = ±10% M = ±20%

Ordering Options Table

Lead Spacing Nominal (mm)	Type of Leads and Packaging	LL Lead Length (mm)	Lead and Packaging Code
10 15 22.5	**Standard Lead and Packaging Options**		
	Bulk (Bag) – Short Leads	4 +2/−0	AA
	Ammo Pack	H0=18.5 ±0.5	DQ
	Other Lead and Packaging Options		
	Tape & Reel (Standard Reel Ø 355mm)	H0=18.5 ±0.5	GY
	Tape & Reel (Large Reel Ø 500mm)	H0=18.5 ±0.5	CK
	Bulk (Bag) – Short Leads	2.7 +0.5/−0	JA
	Bulk (Bag) – Short Leads	3.5 +0.5/−0	JB
	Bulk (Bag) – Short Leads	10 ±1	JC
	Bulk (Bag) – Short Leads	4.0 +0.5/−0	JE
	Bulk (Bag) – Short Leads	3.2 +0.3/−0.2	JH
	Bulk (Bag) – Long Leads	18 ±1	JM*
	Bulk (Bag) – Long Leads	17 +1/−2	Z3**
	Bulk (Bag) – Long Leads	30 +5/−0	40***
	Bulk (Bag) – Long Leads	25 +2/−1	50
27.5	**Standard Lead and Packaging Options**		
	Bulk (Tray) – Short Leads	4 +2/−0	AA
	Other Lead and Packaging Options		
	Tape & Reel (Large Reel Ø 500mm)	H0=18.5 ±0.5	CK[1]
	Bulk (Tray) – Short Leads	2.7 +0.5/−0	JA
	Bulk (Tray) – Short Leads	3.5 +0.5/−0	JB
	Bulk (Tray) – Short Leads	4.0 +0.5/−0	JE
	Bulk (Tray) – Short Leads	3.2 +0.3/−0.2	JH
	Bulk (Tray) – Long Leads	18 ±1	JM
	Bulk (Tray) – Long Leads	30 +5/−0	40
	Bulk (Tray) – Long Leads	25 +2/−1	50
37.5	**Standard Lead and Packaging Options**		
	Bulk (Tray) – Short Leads	4 +2/−0	AA
	Other Lead and Packaging Options		
	Bulk (Tray) – Short Leads	2.7 +0.5/−0	JA
	Bulk (Tray) – Short Leads	3.5 +0.5/−0	JB
	Bulk (Tray) – Short Leads	4.0 +0.5/−0	JE
	Bulk (Tray) – Short Leads	3.2 +0.3/−0.2	JH
	Bulk (Tray) – Long Leads	18 ±1	JM
	Bulk (Tray) – Long Leads	30 +5/−0	40
	Bulk (Tray) – Long Leads	25 +2/−1	50

** Only available for lead spacing ≥15 mm.*
*** Only available for 10 mm lead spacing.*
**** Not available for Stacked Capacitor Technology with 10 mm Lead Spacing.*
[1] Not for all dimensions (see table "Packging Quantity")

Dimensions – Millimeters

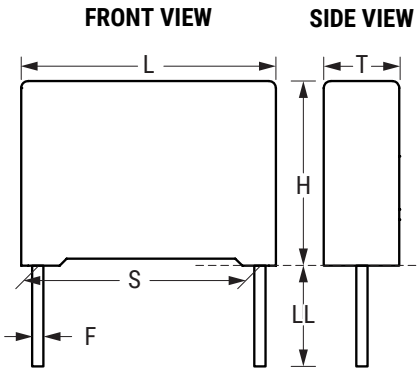

S		T		H		L		F	
Nominal	Tolerance	Nominal	Tolerance	Nominal	Tolerance	Nominal	Tolerance	Nominal	Tolerance
10.0	±0.4	4.0	+0.2/-0.5	9.0	+0.1/-0.5	13.0	+0.2/-0.5	0.6	±0.05
10.0	±0.4	5.0	+0.2/-0.5	11.0	+0.1/-0.5	13.0	+0.2/-0.5	0.6	±0.05
10.0	±0.4	6.0	+0.2/-0.5	12.0	+0.1/-0.5	13.0	+0.2/-0.5	0.6	±0.05
15.0	±0.4	5.0	+0.2/-0.5	11.0	+0.1/-0.5	18.0	+0.3/-0.5	0.8	±0.05
15.0	±0.4	6.0	+0.2/-0.5	12.0	+0.1/-0.5	18.0	+0.3/-0.5	0.8	±0.05
15.0	±0.4	7.5	+0.2/-0.5	13.5	+0.1/-0.5	18.0	±0.5	0.8	±0.05
15.0	±0.4	8.5	+0.2/-0.5	14.5	+0.1/-0.5	18.0	±0.5	0.8	±0.05
15.0	±0.4	9.0	+0.2/-0.5	12.5	+0.1/-0.5	18.0	±0.5	0.8	±0.05
15.0	±0.4	10.0	+0.2/-0.5	16.0	+0.1/-0.5	18.0	±0.5	0.8	±0.05
15.0	±0.4	11.0	+0.2/-0.5	19.0	+0.1/-0.5	18.0	±0.5	0.8	±0.05
15.0	±0.4	13.0	+0.2/-0.5	12.0	+0.1/-0.5	18.0	±0.5	0.8	±0.05
22.5	±0.4	6.0	+0.2/-0.5	15.0	+0.1/-0.5	26.5	+0.3/-0.5	0.8	±0.05
22.5	±0.4	7.0	+0.2/-0.5	16.0	+0.1/-0.5	26.5	+0.3/-0.5	0.8	±0.05
22.5	±0.4	8.5	+0.2/-0.5	17.0	+0.1/-0.5	26.5	+0.3/-0.5	0.8	±0.05
22.5	±0.4	10.0	+0.2/-0.5	18.5	+0.1/-0.5	26.5	+0.3/-0.5	0.8	±0.05
22.5	±0.4	11.0	+0.2/-0.5	20.0	+0.1/-0.5	26.5	+0.3/-0.5	0.8	±0.05
22.5	±0.4	13.0	+0.2/-0.5	22.0	+0.1/-0.5	26.5	+0.3/-0.5	0.8	±0.05
27.5	±0.4	9.0	+0.2/-0.7	17.0	+0.1/-0.7	32.0	+0.3/-0.7	0.8	±0.05
27.5	±0.4	11.0	+0.2/-0.7	20.0	+0.1/-0.7	32.0	+0.3/-0.7	0.8	±0.05
27.5	±0.4	13.0	+0.2/-0.7	12.0	+0.1/-0.7	32.0	+0.3/-0.7	0.8	±0.05
27.5	±0.4	13.0	+0.2/-0.7	22.0	+0.1/-0.7	32.0	+0.3/-0.7	0.8	±0.05
27.5	±0.4	14.0	+0.2/-0.7	28.0	+0.1/-0.7	32.0	+0.3/-0.7	0.8	±0.05
27.5	±0.4	18.0	+0.2/-0.7	33.0	+0.1/-0.7	32.0	+0.3/-0.7	0.8	±0.05
27.5	±0.4	22.0	+0.2/-0.7	37.0	+0.1/-0.7	32.0	+0.3/-0.7	0.8	±0.05
27.5	±0.4	24.0	+0.2/-0.7	15.0	+0.1/-0.7	32.0	+0.3/-0.7	0.8	±0.05
37.5	±0.4	11.0	+0.3/-0.7	22.0	+0.1/-0.7	41.5	+0.3/-0.7	1.0	±0.05
37.5	±0.4	13.0	+0.3/-0.7	24.0	+0.1/-0.7	41.5	+0.3/-0.7	1.0	±0.05
37.5	±0.4	16.0	+0.3/-0.7	28.5	+0.1/-0.7	41.5	+0.3/-0.7	1.0	±0.05
37.5	±0.4	19.0	+0.3/-0.7	32.0	+0.1/-0.7	41.5	+0.3/-0.7	1.0	±0.05
37.5	±0.4	20.0	+0.3/-0.7	40.0	+0.1/-0.7	41.5	+0.3/-0.7	1.0	±0.05
37.5	±0.4	24.0	+0.3/-0.7	15.0	+0.1/-0.7	41.5	+0.3/-0.7	1.0	±0.05
37.5	±0.4	24.0	+0.3/-0.7	19.0	+0.1/-0.7	41.5	+0.3/-0.7	1.0	±0.05
37.5	±0.4	24.0	+0.3/-0.7	44.0	+0.1/-0.7	41.5	+0.3/-0.7	1.0	±0.05
37.5	±0.4	30.0	+0.3/-0.7	45.0	+0.1/-0.7	41.5	+0.3/-0.7	1.0	±0.05

Note: See Ordering Options Table for lead length (LL/H_0) options.

Performance Characteristics

Dielectric	Polyester film (polyethylene terephthalate)							
Plates	Metal layer deposited by evaporation under vacum							
Winding	Non-inductive type							
Leads	Tinned wire							
Protection	Plastic case, thermosetting resin filled. Box material is solvent resistant and flame retardant according to UL 94.							
Related Documents	IEC 60384–2							
Rated Voltage V_R (VDC)	50	63	100	160	250	400	630	1,000
Rated Voltage V_R (VAC)	30	40	63	90	160	200	220	250
Capacitance Range (µF)	1.5 – 5.6	0.68 – 100	0.33 – 150	0.22 – 150	0.1 – 68	0.022 – 33	0.0047 – 10	0.001 – 4.7
Capacitance Values	E6 series (IEC 60063) measured at 1 kHz and +20 ±1°C							
Capacitance Tolerance	±5%, ±10%, ±20%							
Operating Temperature Range	−55°C to +105°C Upper operating temperature of +125°C is allowed for a maximum operating time of 1,000 hours.							
Rated Temperature T_R	+85°C							
Voltage Derating	Above +85°C DC and AC voltage derating is 1.25%/°C							
Climatic Category	55/105/56 IEC 60068–1							
Storage Conditions	Storage time: ≤ 24 months from the date marked on the label package							
	Average relative humidity per year ≤ 70%							
	RH ≤ 85% for 30 days randomly distributed throughout the year							
	Dew is absent							
	Temperature: −40 to 80°C (see "Maximum Humidity in Storage Conditions" graph below)							
Test Voltage	1.6 x V_R VDC for 2 seconds (between terminations) at +25°C ±5°C							
Capacitance Drift	Maximum 3% after a 2 year storage period at a temperature of +10°C to +40°C and a relative humidity of 40% to 60%							
Reliability (Reference IEC-61709)	Operational life > 200,000 hours							
	Failure rate ≤ 1 FIT, T = +40°C, V = 0.5 x V_R							
	Failure criteria: open or short circuit, capacitance change > 10%, DF 2 times the catalog limits, IR < 0.005 x initial limit							
Maximum Pulse Steepness	dV/dt according to Table 1. For peak to peak voltages lower than rated voltage (Vpp <V_R), the specified dv/dt can be multiplied by the factor V_R/Vpp							
Temperature Coefficient	+400 (±200) ppm/°C at 1 kHz							
Self Inductance (Lead Length ~ 2 mm)	Lead Spacing (mm)	10	15	22.5	27.5	37.5		
	L (nH)	9	10	18	18	22		
	Maximum 1 nH per 1 mm lead and capacitor length.							

Performance Characteristics cont.

Dissipation Factor tanδ	Maximum Values at 25°C ±5°C		
	Frequency	C ≤ 1 µF	C > 1 µF
	1 kHz	1.00%	1.00%
	10 kHz	1.50%	–
Insulation Resistance	Measured at +25°C ±5°C, according to IEC 60384–2		
	Minimum Values Between Terminals		
	Voltage Charge/Time	C ≤ 0.33 µF	C > 0.33 µF
	50 VDC for V_R ≤ 100 VDC 1 minute	≥ 3,750 MΩ (≥ 50,000 MΩ) *	≥ 1,250 MΩ • µF (≥ 5,000 MΩ • µF) *
	100 VDC for V_R > 100 VDC 1 minute	≥ 30,000 MΩ (≥ 50,000 MΩ) *	≥ 10,000 MΩ • µF (≥ 17,000 MΩ • µF) *

** typical value*

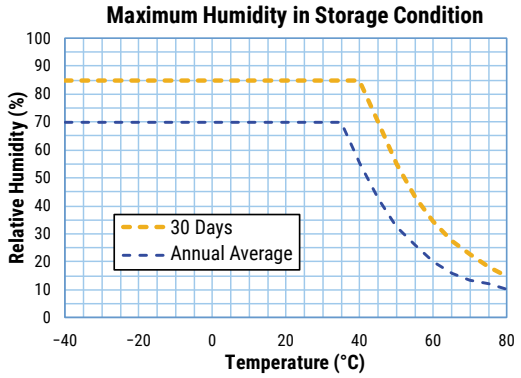

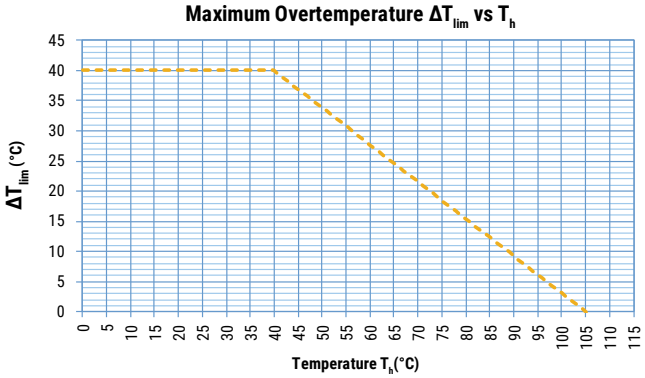

T_h is the maximum ambient temperature surrounding the capacitor or hottest contact point (e.g. tracks), whichever is higher, in the worst operation conditions in °C.

Qualification

Automotive grade products meet or exceed the requirements outlined by the Automotive Electronics Council. Details regarding test methods and conditions are referenced in document AEC–Q200, Stress Test Qualification for Passive Components. For additional information regarding the Automotive Electronics Council and AEC–Q200, please visit their website at www.aecouncil.com.

Maximum Voltage (V_{rms}) vs. Frequency (Sinusoidal Waveform/Th ≤ 40°C)

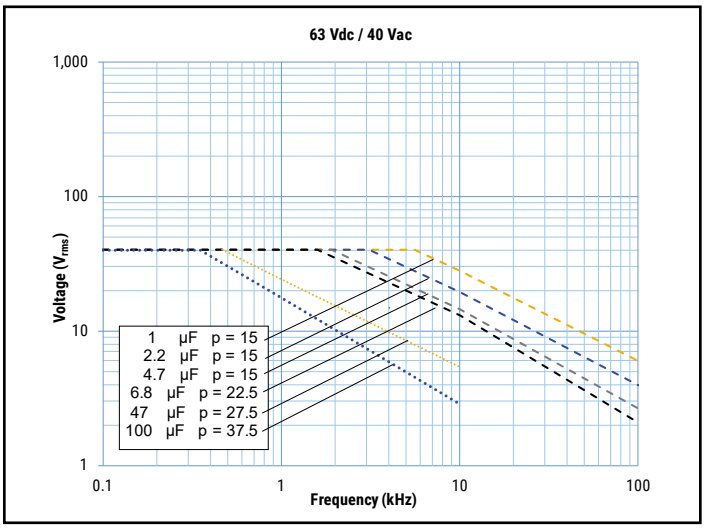

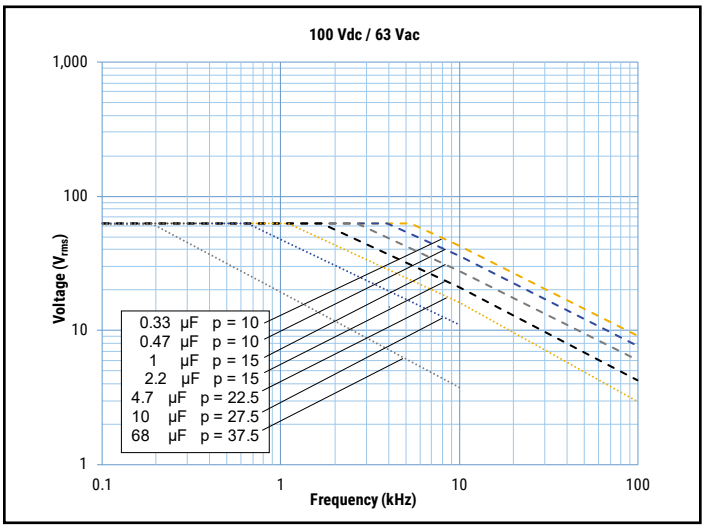

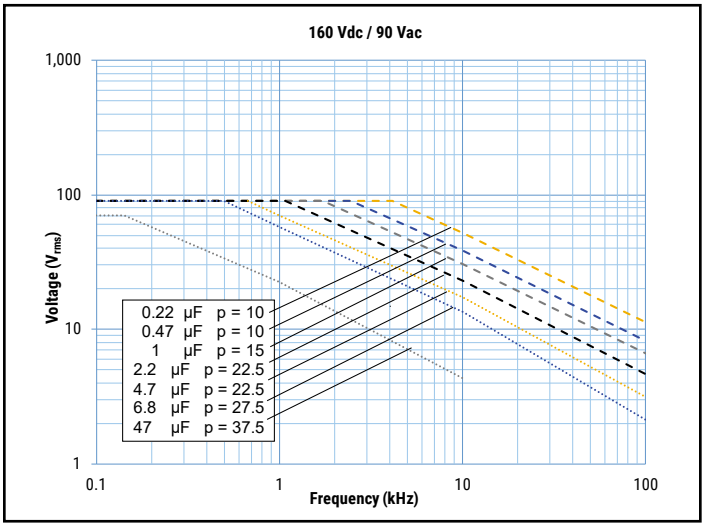

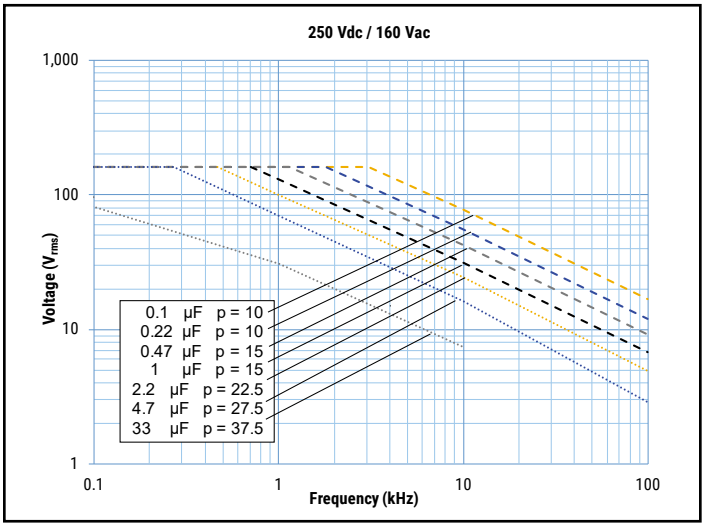

Maximum Voltage (V_{rms}) vs. Frequency (Sinusoidal Waveform/Th ≤ 40°C) cont.

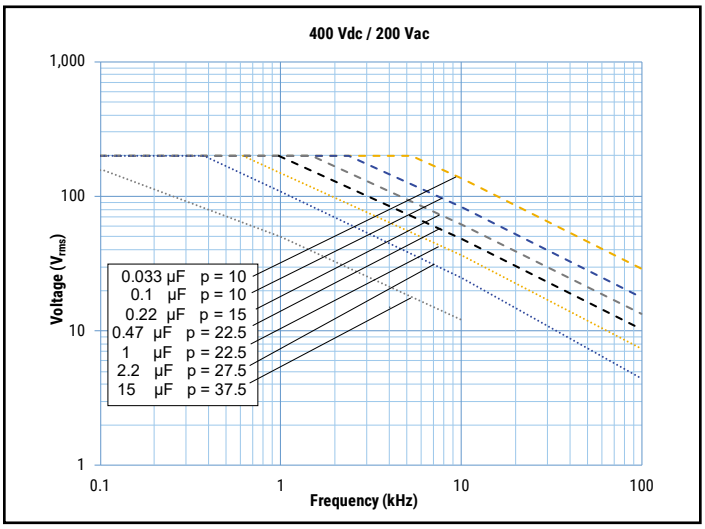

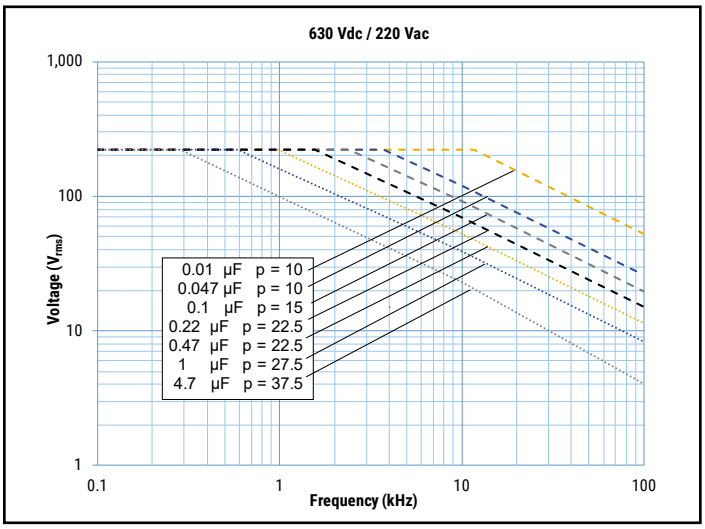

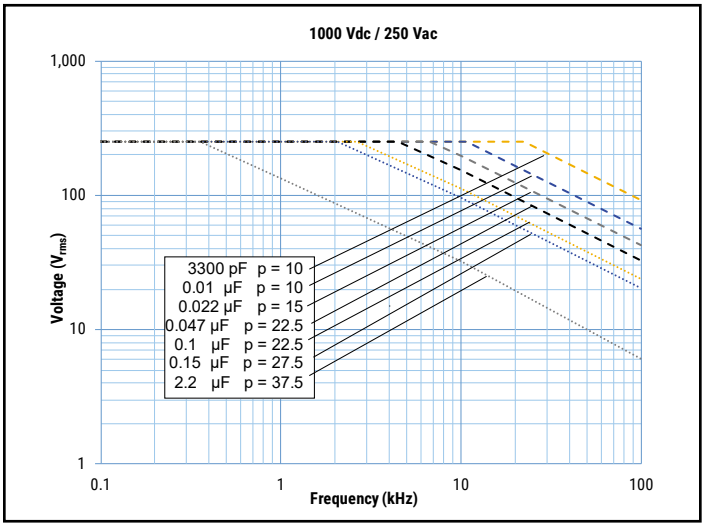

Maximum Current (I_{rms}) vs. Frequency (Sinusoidal Waveform/Th ≤ 40°C)

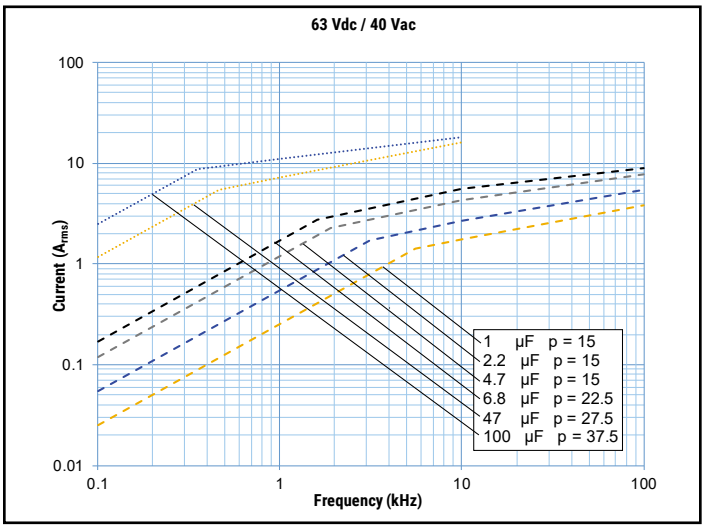

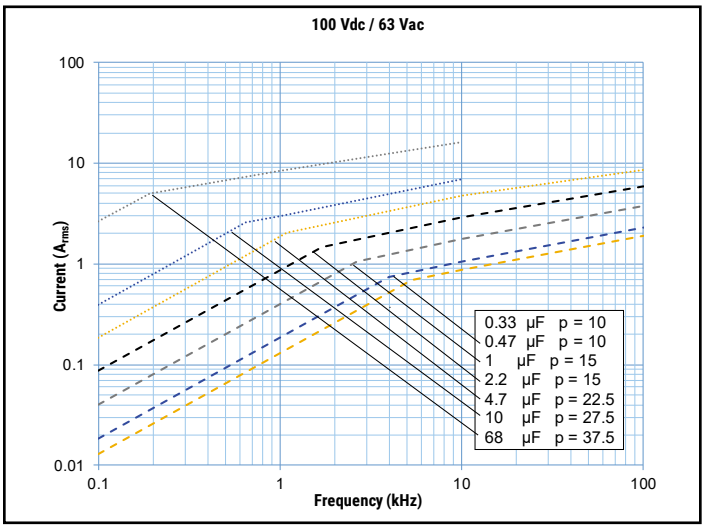

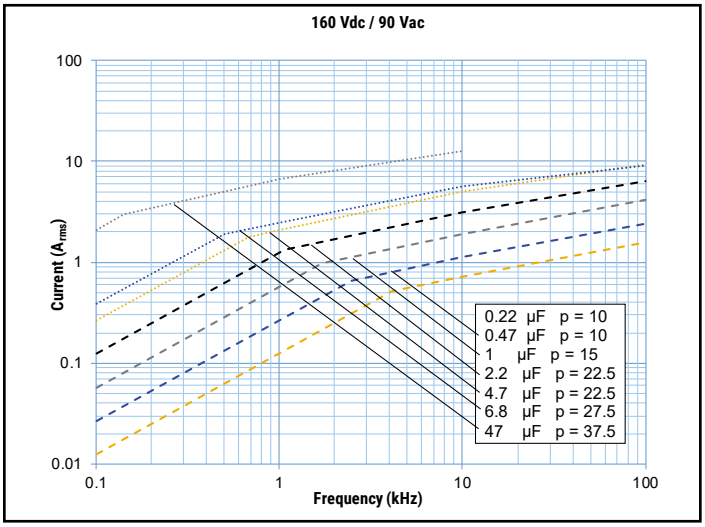

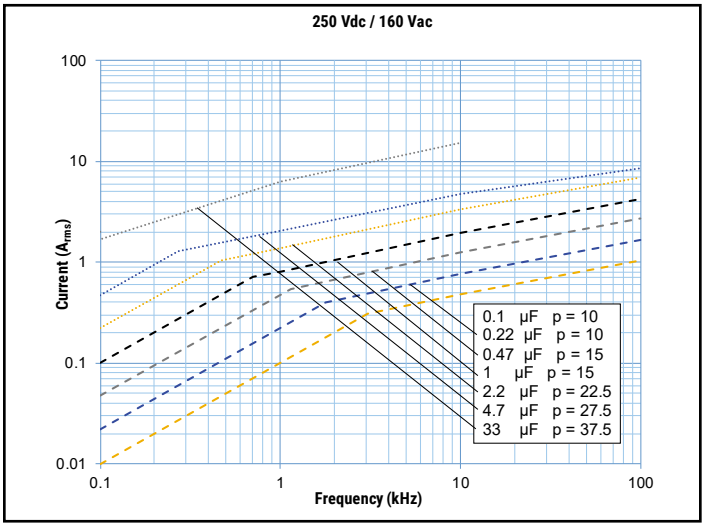

Maximum Current (I_{rms}) vs. Frequency (Sinusoidal Waveform/Th ≤ 40°C) cont.

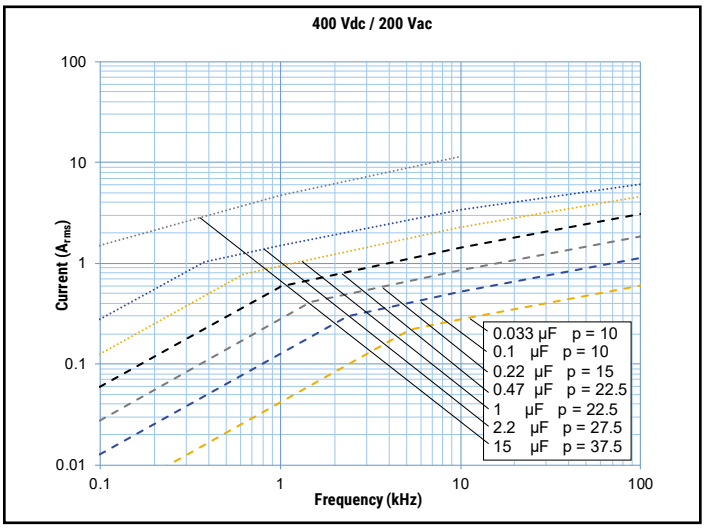

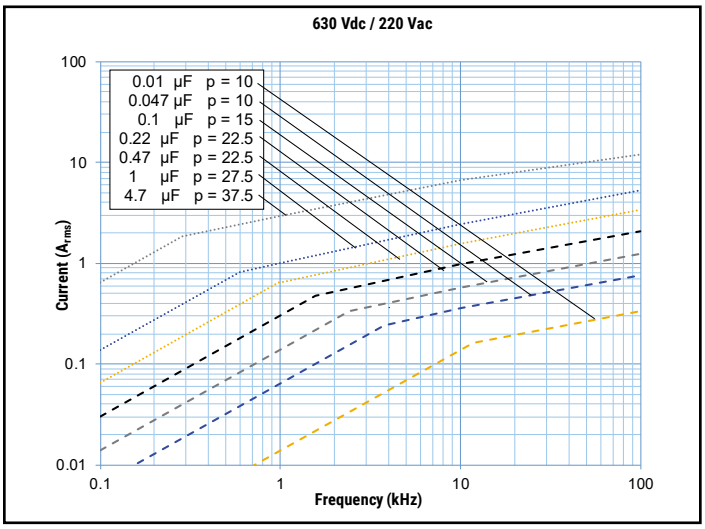

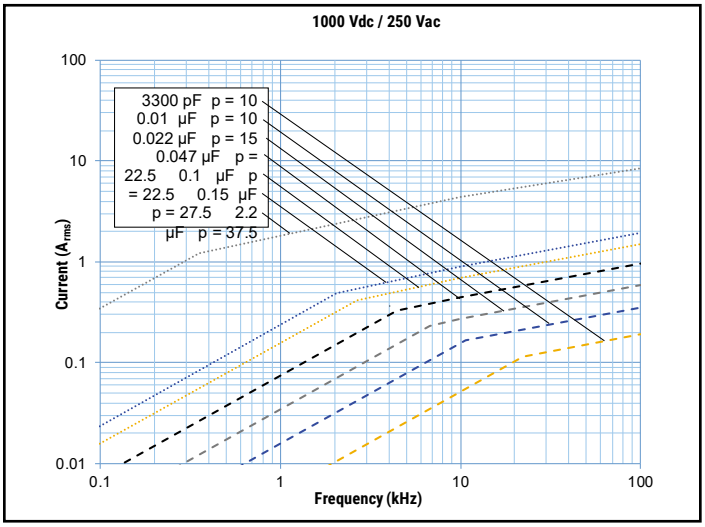

Environmental Test Data

Damp Heat, Steady State Test	Test Conditions		Performances
	Temperature Relative humidity (RH) Test duration	+40°C ±2°C 93% ±2% 56 days	|Δ C/C| ≤ 5%, Δ tanδ ≤ 0.005 at 1 kHz IR after test ≥ 50% of initial limit
Endurance Test	**Test Conditions**		**Performances**
	Temperature Voltage applied Test duration	+105°C ±2°C 1.25 x V_C 2,000 hours	|Δ C/C| ≤ 5%, Δ tanδ ≤ 0.005 at 10 kHz for C ≤ 1 µF Δ tanδ ≤ 0.003 at 1 kHz for C > 1 µF IR after test ≥ 50% of initial limit
Resistance to Soldering Heat Test	**Test Conditions**		**Performances**
	Solder bath temperature Dipping time (with heat screen)	260°C ±5°C 10 seconds ±1 second	|Δ C/C| ≤ 2%, Δ tanδ ≤ 0.005 at 10 kHz for C ≤ 1 µF Δ tanδ ≤ 0.003 at 1 kHz for C > 1 µF IR after test ≥ initial limit

Environmental Compliance

All KEMET MKT capacitors are RoHS compliant.

Table 1A – Ratings & Part Number Reference (Stacked Capacitor Technology)

VDC	VAC	Capacitance Value (µF)	Dimensions in mm			Lead Spacing (S)	dV/dt (V/µs)	Maximum K_0 (V^2/µs)	KEMET Internal Part Number	Customer Part Number
			T	H	L					
63	40	1.0	4.0	9.0	13.0	10.0	50	6300	60DF4100(1)6A(2)	R60DF4100(1)6A(2)
63	40	1.5	5.0	11.0	13.0	10.0	50	6300	60DF4150(1)6A(2)	R60DF4150(1)6A(2)
63	40	2.2	5.0	11.0	13.0	10.0	50	6300	60DF4220(1)6A(2)	R60DF4220(1)6A(2)
63	40	3.3	6.0	12.0	13.0	10.0	50	6300	60DF4330(1)6A(2)	R60DF4330(1)6A(2)
100	63	0.33	4.0	9.0	13.0	10.0	75	15000	60EF3330(1)6A(2)	R60EF3330(1)6A(2)
100	63	0.47	4.0	9.0	13.0	10.0	75	15000	60EF3470(1)6A(2)	R60EF3470(1)6A(2)
100	63	0.68	4.0	9.0	13.0	10.0	75	15000	60EF3680(1)6A(2)	R60EF3680(1)6A(2)
100	63	1.0	5.0	11.0	13.0	10.0	75	15000	60EF4100(1)6A(2)	R60EF4100(1)6A(2)
100	63	1.5	5.0	11.0	13.0	10.0	75	15000	60EF4150(1)6A(2)	R60EF4150(1)6A(2)
160	90	0.22	4.0	9.0	13.0	10.0	100	32000	60GF3220(1)6A(2)	R60GF3220(1)6A(2)
160	90	0.33	4.0	9.0	13.0	10.0	100	32000	60GF3330(1)6A(2)	R60GF3330(1)6A(2)
160	90	0.47	5.0	11.0	13.0	10.0	100	32000	60GF3470(1)6A(2)	R60GF3470(1)6A(2)
160	90	0.68	6.0	12.0	13.0	10.0	100	32000	60GF3680(1)6A(2)	R60GF3680(1)6A(2)
250	160	0.10	4.0	9.0	13.0	10.0	150	75000	60IF3100(1)6A(2)	R60IF3100(1)6A(2)
250	160	0.15	4.0	9.0	13.0	10.0	150	75000	60IF3150(1)6A(2)	R60IF3150(1)6A(2)
250	160	0.22	5.0	11.0	13.0	10.0	150	75000	60IF3220(1)6A(2)	R60IF3220(1)6A(2)
250	160	0.33	5.0	11.0	13.0	10.0	150	75000	60IF3330(1)6A(2)	R60IF3330(1)6A(2)
250	160	0.47	6.0	12.0	13.0	10.0	150	75000	60IF3470(1)6A(2)	R60IF3470(1)6A(2)
400	200	0.033	4.0	9.0	13.0	10.0	175	140000	60MF2330(1)6A(2)	R60MF2330(1)6A(2)
400	200	0.047	4.0	9.0	13.0	10.0	175	140000	60MF2470(1)6A(2)	R60MF2470(1)6A(2)
400	200	0.068	4.0	9.0	13.0	10.0	175	140000	60MF2680(1)6A(2)	R60MF2680(1)6A(2)
400	200	0.10	5.0	11.0	13.0	10.0	175	140000	60MF3100(1)6A(2)	R60MF3100(1)6A(2)
400	200	0.15	6.0	12.0	13.0	10.0	175	140000	60MF3150(1)6A(2)	R60MF3150(1)6A(2)
VDC	**VAC**	**Capacitance Value (µF)**	**T (mm)**	**H (mm)**	**L (mm)**	**Lead Spacing**	**dV/dt (V/µs)**	**Max K_0 (V^2/µs)**	**KEMET Internal Part Number**	**Customer Part Number**

Table 1A – Ratings & Part Number Reference (Stacked Capacitor Technology) cont.

VDC	VAC	Capacitance Value (µF)	Dimensions in mm			Lead Spacing (S)	dV/dt (V/µs)	Maximum K_0 (V^2/µs)	KEMET Internal Part Number	Customer Part Number
			T	H	L					
630	220	0.010	4.0	9.0	13.0	10.0	200	252000	60PF2100(1)6A(2)	R60PF2100(1)6A(2)
630	220	0.015	4.0	9.0	13.0	10.0	200	252000	60PF2150(1)6A(2)	R60PF2150(1)6A(2)
630	220	0.022	4.0	9.0	13.0	10.0	200	252000	60PF2220(1)6A(2)	R60PF2220(1)6A(2)
630	220	0.033	5.0	11.0	13.0	10.0	200	252000	60PF2330(1)6A(2)	R60PF2330(1)6A(2)
630	220	0.047	5.0	11.0	13.0	10.0	200	252000	60PF2470(1)6A(2)	R60PF2470(1)6A(2)
VDC	**VAC**	**Capacitance Value (µF)**	**T (mm)**	**H (mm)**	**L (mm)**	**Lead Spacing**	**dV/dt (V/µs)**	**Max K_0 (V^2/µs)**	**KEMET Internal Part Number**	**Customer Part Number**

Table 1B – Ratings & Part Number Reference (Wound Capacitor Technology)

VDC	VAC	Capacitance Value (µF)	Dimensions in mm			Lead Spacing (S)	dV/dt (V/µs)	Maximum K_0 (V^2/µs)	KEMET Internal Part Number	Customer Part Number
			T	H	L					
63	40	0.68	5.0	11.0	18.0	15.0	2.5	315	60DI3680(1)30(2)	R60DI3680(1)30(2)
63	40	1.0	5.0	11.0	18.0	15.0	2.5	315	60DI4100(1)30(2)	R60DI4100(1)30(2)
63	40	1.5	5.0	11.0	18.0	15.0	2.5	315	60DI4150(1)30(2)	R60DI4150(1)30(2)
63	40	2.2	6.0	12.0	18.0	15.0	2.5	315	60DI4220(1)30(2)	R60DI4220(1)30(2)
63	40	3.3	7.5	13.5	18.0	15.0	2.5	315	60DI4330(1)30(2)	R60DI4330(1)30(2)
63	40	3.3	9.0	12.5	18.0	15.0	2.5	315	60DI4330(1)L0(2)	R60DI4330(1)L0(2)
63	40	4.7	8.5	14.5	18.0	15.0	2.5	315	60DI4470(1)30(2)	R60DI4470(1)30(2)
63	40	4.7	13.0	12.0	18.0	15.0	2.5	315	60DI4470(1)L0(2)	R60DI4470(1)L0(2)
63	40	6.8	10.0	16.0	18.0	15.0	2.5	315	60DI4680(1)30(2)	R60DI4680(1)30(2)
63	40	3.3	6.0	15.0	26.5	22.5	1.5	189	60DN4330(1)30(2)	R60DN4330(1)30(2)
63	40	4.7	7.0	16.0	26.5	22.5	1.5	189	60DN4470(1)30(2)	R60DN4470(1)30(2)
63	40	6.8	7.0	16.0	26.5	22.5	1.5	189	60DN4680(1)30(2)	R60DN4680(1)30(2)
63	40	10.0	8.5	17.0	26.5	22.5	1.5	189	60DN5100(1)30(2)	R60DN5100(1)30(2)
63	40	15.0	11.0	20.0	26.5	22.5	1.5	189	60DN5150(1)30(2)	R60DN5150(1)30(2)
63	40	4.7	13.0	12.0	32.0	27.5	1.0	126	60DR4470(1)L0(2)	R60DR4470(1)L0(2)
63	40	6.8	13.0	12.0	32.0	27.5	1.0	126	60DR4680(1)L0(2)	R60DR4680(1)L0(2)
63	40	10.0	9.0	17.0	32.0	27.5	1.0	126	60DR5100(1)30(2)	R60DR5100(1)30(2)
63	40	15.0	11.0	20.0	32.0	27.5	1.0	126	60DR5150(1)30(2)	R60DR5150(1)30(2)
63	40	15.0	24.0	15.0	32.0	27.5	1.0	126	60DR5150(1)L0(2)	R60DR5150(1)L0(2)
63	40	22.0	13.0	22.0	32.0	27.5	1.0	126	60DR5220(1)30(2)	R60DR5220(1)30(2)
63	40	22.0	24.0	15.0	32.0	27.5	1.0	126	60DR5220(1)L0(2)	R60DR5220(1)L0(2)
63	40	22.0	11.0	20.0	32.0	27.5	1.0	126	60DR5220(1)40(2)	R60DR5220(1)40(2)
63	40	33.0	18.0	33.0	32.0	27.5	1.0	126	60DR5330(1)50(2)	R60DR5330(1)50(2)
63	40	47.0	18.0	33.0	32.0	27.5	1.0	126	60DR5470(1)40(2)	R60DR5470(1)40(2)
63	40	47.0	22.0	37.0	32.0	27.5	1.0	126	60DR5470(1)50(2)	R60DR5470(1)50(2)
63	40	68.0	22.0	37.0	32.0	27.5	1.0	126	60DR5680(1)30(2)	R60DR5680(1)30(2)
63	40	22.0	11.0	22.0	41.5	37.5	0.8	101	60DW5220(1)30(2)	R60DW5220(1)30(2)
63	40	22.0	24.0	15.0	41.5	37.5	0.8	101	60DW5220(1)L0(2)	R60DW5220(1)L0(2)
63	40	33.0	16.0	28.5	41.5	37.5	0.8	101	60DW5330(1)30(2)	R60DW5330(1)30(2)
63	40	33.0	24.0	15.0	41.5	37.5	0.8	101	60DW5330(1)L0(2)	R60DW5330(1)L0(2)
63	40	47.0	16.0	28.5	41.5	37.5	0.8	101	60DW5470(1)50(2)	R60DW5470(1)50(2)
63	40	47.0	24.0	19.0	41.5	37.5	0.8	101	60DW5470(1)L0(2)	R60DW5470(1)L0(2)
63	40	68.0	19.0	32.0	41.5	37.5	0.8	101	60DW5680(1)30(2)	R60DW5680(1)30(2)
63	**40**	**100.0**	**20.0**	**40.0**	**41.5**	**37.5**	**0.8**	**101**	**60DW6100(1)50(3)**	**R60DW6100(1)50(3)**
63	40	100.0	24.0	44.0	41.5	37.5	0.8	101	60DW6100(1)60(2)	R60DW6100(1)60(2)
100	63	0.33	5.0	11.0	18.0	15.0	3.0	600	60EI3330(1)30(2)	R60EI3330(1)30(2)
100	63	0.47	5.0	11.0	18.0	15.0	3.0	600	60EI3470(1)30(2)	R60EI3470(1)30(2)
VDC	**VAC**	**Capacitance Value (µF)**	**T (mm)**	**H (mm)**	**L (mm)**	**Lead Spacing**	**dV/dt (V/µs)**	**Max K_0 (V^2/µs)**	**KEMET Internal Part Number**	**Customer Part Number**

(1) Insert lead and packaging code. See Ordering Options Table for available options.
(2) J = 5%, K = 10%, M = 20%
(3) K = 10%, M = 20%

Table 1B – Ratings & Part Number Reference (Wound Capacitor Technology) cont.

VDC	VAC	Capacitance Value (µF)	Dimensions in mm			Lead Spacing (S)	dV/dt (V/µs)	Maximum K_0 (V^2/µs)	KEMET Internal Part Number	Customer Part Number
			T	H	L					
100	63	0.68	5.0	11.0	18.0	15.0	3.0	600	60EI3680(1)30(2)	R60EI3680(1)30(2)
100	63	1.0	5.0	11.0	18.0	15.0	3.0	600	60EI4100(1)30(2)	R60EI4100(1)30(2)
100	63	1.5	7.5	13.5	18.0	15.0	3.0	600	60EI4150(1)30(2)	R60EI4150(1)30(2)
100	63	2.2	8.5	14.5	18.0	15.0	3.0	600	60EI4220(1)30(2)	R60EI4220(1)30(2)
100	63	2.2	9.0	12.5	18.0	15.0	3.0	600	60EI4220(1)L0(2)	R60EI4220(1)L0(2)
100	63	3.3	10.0	16.0	18.0	15.0	3.0	600	60EI4330(1)30(2)	R60EI4330(1)30(2)
100	63	3.3	13.0	12.0	18.0	15.0	3.0	600	60EI4330(1)L0(2)	R60EI4330(1)L0(2)
100	63	4.7	11.0	19.0	18.0	15.0	3.0	600	60EI4470(1)30(2)	R60EI4470(1)30(2)
100	63	1.5	6.0	15.0	26.5	22.5	2.0	400	60EN4150(1)30(2)	R60EN4150(1)30(2)
100	63	2.2	6.0	15.0	26.5	22.5	2.0	400	60EN4220(1)30(2)	R60EN4220(1)30(2)
100	63	3.3	7.0	16.0	26.5	22.5	2.0	400	60EN4330(1)30(2)	R60EN4330(1)30(2)
100	63	4.7	8.5	17.0	26.5	22.5	2.0	400	60EN4470(1)30(2)	R60EN4470(1)30(2)
100	63	6.8	10.0	18.5	26.5	22.5	2.0	400	60EN4680(1)30(2)	R60EN4680(1)30(2)
100	63	10.0	13.0	22.0	26.5	22.5	2.0	400	60EN5100(1)30(2)	R60EN5100(1)30(2)
100	63	4.7	9.0	17.0	32.0	27.5	1.5	300	60ER4470(1)30(2)	R60ER4470(1)30(2)
100	63	4.7	13.0	12.0	32.0	27.5	1.5	300	60ER4470(1)L0(2)	R60ER4470(1)L0(2)
100	63	6.8	9.0	17.0	32.0	27.5	1.5	300	60ER4680(1)30(2)	R60ER4680(1)30(2)
100	63	6.8	13.0	12.0	32.0	27.5	1.5	300	60ER4680(1)L0(2)	R60ER4680(1)L0(2)
100	63	10.0	9.0	17.0	32.0	27.5	1.5	300	60ER5100(1)40(2)	R60ER5100(1)40(2)
100	63	15.0	11.0	20.0	32.0	27.5	1.5	300	60ER5150(1)40(2)	R60ER5150(1)40(2)
100	63	15.0	24.0	15.0	32.0	27.5	1.5	300	60ER5150(1)L0(2)	R60ER5150(1)L0(2)
100	63	22.0	13.0	22.0	32.0	27.5	1.5	300	60ER5220(1)40(2)	R60ER5220(1)40(2)
100	63	22.0	24.0	15.0	32.0	27.5	1.5	300	60ER5220(1)L0(2)	R60ER5220(1)L0(2)
100	63	33.0	14.0	28.0	32.0	27.5	1.5	300	60ER5330(1)40(2)	R60ER5330(1)40(2)
100	63	33.0	18.0	33.0	32.0	27.5	1.5	300	60ER5330(1)50(2)	R60ER5330(1)50(2)
100	63	47.0	18.0	33.0	32.0	27.5	1.5	300	60ER5470(1)40(2)	R60ER5470(1)40(2)
100	63	47.0	22.0	37.0	32.0	27.5	1.5	300	60ER5470(1)50(2)	R60ER5470(1)50(2)
100	63	68.0	22.0	37.0	32.0	27.5	1.5	300	60ER5680(1)00(2)	R60ER5680(1)00(2)
100	63	15.0	11.0	22.0	41.5	37.5	1.0	200	60EW5150(1)40(2)	R60EW5150(1)40(2)
100	63	22.0	11.0	22.0	41.5	37.5	1.0	200	60EW5220(1)40(2)	R60EW5220(1)40(2)
100	63	22.0	24.0	15.0	41.5	37.5	0.8	101	60EW5220(1)L0(2)	R60EW5220(1)L0(2)
100	63	33.0	16.0	28.5	41.5	37.5	1.0	200	60EW5330(1)30(2)	R60EW5330(1)30(2)
100	63	33.0	24.0	15.0	41.5	37.5	0.8	101	60EW5330(1)L0(2)	R60EW5330(1)L0(2)
100	63	47.0	16.0	28.5	41.5	37.5	1.0	200	60EW5470(1)40(2)	R60EW5470(1)40(2)
100	63	47.0	24.0	19.0	41.5	37.5	0.8	101	60EW5470(1)L0(2)	R60EW5470(1)L0(2)
100	63	68.0	19.0	32.0	41.5	37.5	1.0	200	60EW5680(1)50(2)	R60EW5680(1)50(2)
100	**63**	**100.0**	**20.0**	**40.0**	**41.5**	**37.5**	**1.0**	**200**	**60EW6100(1)00(3)**	**R60EW6100(1)00(3)**
100	63	100.0	24.0	44.0	41.5	37.5	1.0	200	60EW6100(1)10(2)	R60EW6100(1)10(2)
100	63	150.0	30.0	45.0	41.5	37.5	1.0	200	60EW6150(1)10(2)	R60EW6150(1)10(2)
160	90	0.33	5.0	11.0	18.0	15.0	9.0	2880	60GI3330(1)30(2)	R60GI3330(1)30(2)
160	90	0.47	5.0	11.0	18.0	15.0	9.0	2880	60GI3470(1)30(2)	R60GI3470(1)30(2)
160	90	0.68	5.0	11.0	18.0	15.0	9.0	2880	60GI3680(1)30(2)	R60GI3680(1)30(2)
160	90	1.0	7.5	13.5	18.0	15.0	9.0	2880	60GI4100(1)30(2)	R60GI4100(1)30(2)
160	90	1.5	8.5	14.5	18.0	15.0	9.0	2880	60GI4150(1)30(2)	R60GI4150(1)30(2)
160	90	1.5	9.0	12.5	18.0	15.0	9.0	2880	60GI4150(1)L0(2)	R60GI4150(1)L0(2)
160	90	2.2	10.0	16.0	18.0	15.0	9.0	2880	60GI4220(1)30(2)	R60GI4220(1)30(2)
160	90	2.2	13.0	12.0	18.0	15.0	9.0	2880	60GI4220(1)L0(2)	R60GI4220(1)L0(2)
160	90	3.3	11.0	19.0	18.0	15.0	9.0	2880	60GI4330(1)30(2)	R60GI4330(1)30(2)
160	90	1.5	6.0	15.0	26.5	22.5	5.5	1760	60GN4150(1)30(2)	R60GN4150(1)30(2)
160	90	2.2	7.0	16.0	26.5	22.5	5.5	1760	60GN4220(1)30(2)	R60GN4220(1)30(2)
160	90	3.3	8.5	17.0	26.5	22.5	5.5	1760	60GN4330(1)30(2)	R60GN4330(1)30(2)
160	90	4.7	11.0	20.0	26.5	22.5	5.5	1760	60GN4470(1)30(2)	R60GN4470(1)30(2)
160	90	6.8	13.0	22.0	26.5	22.5	5.5	1760	60GN4680(1)30(2)	R60GN4680(1)30(2)
160	90	3.3	9.0	17.0	32.0	27.5	3.0	960	60GR4330(1)30(2)	R60GR4330(1)30(2)
160	90	3.3	13.0	12.0	32.0	27.5	3.0	960	60GR4330(1)L0(2)	R60GR4330(1)L0(2)
160	90	4.7	9.0	17.0	32.0	27.5	3.0	960	60GR4470(1)30(2)	R60GR4470(1)30(2)
160	90	4.7	13.0	12.0	32.0	27.5	3.0	960	60GR4470(1)L0(2)	R60GR4470(1)L0(2)
160	90	6.8	9.0	17.0	32.0	27.5	3.0	960	60GR4680(1)40(2)	R60GR4680(1)40(2)
VDC	**VAC**	**Capacitance Value (µF)**	**T (mm)**	**H (mm)**	**L (mm)**	**Lead Spacing**	**dV/dt (V/µs)**	**Max K_0 (V^2/µs)**	**KEMET Internal Part Number**	**Customer Part Number**

(1) Insert lead and packaging code. See Ordering Options Table for available options.
(2) J = 5%, K = 10%, M = 20%
(3) K = 10%, M = 20%

Table 1B – Ratings & Part Number Reference (Wound Capacitor Technology) cont.

VDC	VAC	Capacitance Value (µF)	Dimensions in mm			Lead Spacing (S)	dV/dt (V/µs)	Maximum K_0 (V^2/µs)	KEMET Internal Part Number	Customer Part Number
			T	H	L					
160	90	6.8	13.0	12.0	32.0	27.5	3.0	960	60GR4680(1)L0(2)	R60GR4680(1)L0(2)
160	90	10.0	9.0	17.0	32.0	27.5	3.0	960	60GR5100(1)40(2)	R60GR5100(1)40(2)
160	**90**	**10.0**	**24.0**	**15.0**	**32.0**	**27.5**	**3.0**	**960**	**60GR5100(1)L0(3)**	**R60GR5100(1)L0(3)**
160	90	15.0	11.0	20.0	32.0	27.5	3.0	960	60GR5150(1)40(2)	R60GR5150(1)40(2)
160	90	15.0	24.0	15.0	32.0	27.5	3.0	960	60GR5150(1)L0(2)	R60GR5150(1)L0(2)
160	90	22.0	13.0	22.0	32.0	27.5	3.0	960	60GR5220(1)40(2)	R60GR5220(1)40(2)
160	90	22.0	24.0	15.0	32.0	27.5	3.0	960	60GR5220(1)L0(2)	R60GR5220(1)L0(2)
160	90	33.0	14.0	28.0	32.0	27.5	3.0	960	60GR5330(1)00(2)	R60GR5330(1)00(2)
160	90	47.0	18.0	33.0	32.0	27.5	3.0	960	60GR5470(1)00(2)	R60GR5470(1)00(2)
160	90	68.0	22.0	37.0	32.0	27.5	3.0	960	60GR5680(1)00(2)	R60GR5680(1)00(2)
160	90	10.0	11.0	22.0	41.5	37.5	2.0	640	60GW5100(1)30(2)	R60GW5100(1)30(2)
160	90	15.0	11.0	22.0	41.5	37.5	2.0	640	60GW5150(1)40(2)	R60GW5150(1)40(2)
160	90	15.0	24.0	15.0	41.5	37.5	2.0	640	60GW5150(1)L0(2)	R60GW5150(1)L0(2)
160	90	22.0	11.0	22.0	41.5	37.5	2.0	640	60GW5220(1)40(2)	R60GW5220(1)40(2)
160	90	22.0	24.0	15.0	41.5	37.5	2.0	640	60GW5220(1)L0(2)	R60GW5220(1)L0(2)
160	90	33.0	13.0	24.0	41.5	37.5	2.0	640	60GW5330(1)40(2)	R60GW5330(1)40(2)
160	90	33.0	24.0	15.0	41.5	37.5	2.0	640	60GW5330(1)L0(2)	R60GW5330(1)L0(2)
160	90	47.0	16.0	28.5	41.5	37.5	2.0	640	60GW5470(1)40(2)	R60GW5470(1)40(2)
160	90	47.0	24.0	19.0	41.5	37.5	2.0	640	60GW5470(1)L0(2)	R60GW5470(1)L0(2)
160	90	68.0	19.0	32.0	41.5	37.5	2.0	640	60GW5680(1)00(2)	R60GW5680(1)00(2)
160	90	100.0	20.0	40.0	41.5	37.5	2.0	640	60GW6100(1)00(2)	R60GW6100(1)00(2)
160	90	150.0	30.0	45.0	41.5	37.5	2.0	640	60GW6150(1)00(2)	R60GW6150(1)00(2)
250	160	0.10	5.0	11.0	18.0	15.0	12.0	6000	60II3100(1)30(2)	R60II3100(1)30(2)
250	160	0.15	5.0	11.0	18.0	15.0	12.0	6000	60II3150(1)30(2)	R60II3150(1)30(2)
250	160	0.22	5.0	11.0	18.0	15.0	12.0	6000	60II3220(1)30(2)	R60II3220(1)30(2)
250	160	0.33	5.0	11.0	18.0	15.0	12.0	6000	60II3330(1)30(2)	R60II3330(1)30(2)
250	160	0.47	6.0	12.0	18.0	15.0	12.0	6000	60II3470(1)30(2)	R60II3470(1)30(2)
250	160	0.68	7.5	13.5	18.0	15.0	12.0	6000	60II3680(1)30(2)	R60II3680(1)30(2)
250	160	0.68	9.0	12.5	18.0	15.0	12.0	6000	60II3680(1)L0(2)	R60II3680(1)L0(2)
250	160	1.0	8.5	14.5	18.0	15.0	12.0	6000	60II4100(1)30(2)	R60II4100(1)30(2)
250	160	1.0	13.0	12.0	18.0	15.0	12.0	6000	60II4100(1)L0(2)	R60II4100(1)L0(2)
250	160	1.5	10.0	16.0	18.0	15.0	12.0	6000	60II4150(1)30(2)	R60II4150(1)30(2)
250	160	0.47	6.0	15.0	26.5	22.5	8.0	4000	60IN3470(1)30(2)	R60IN3470(1)30(2)
250	160	0.68	6.0	15.0	26.5	22.5	8.0	4000	60IN3680(1)30(2)	R60IN3680(1)30(2)
250	160	1.0	6.0	15.0	26.5	22.5	8.0	4000	60IN4100(1)30(2)	R60IN4100(1)30(2)
250	160	1.5	7.0	16.0	26.5	22.5	8.0	4000	60IN4150(1)30(2)	R60IN4150(1)30(2)
250	160	2.2	10.0	18.5	26.5	22.5	8.0	4000	60IN4220(1)30(2)	R60IN4220(1)30(2)
250	160	3.3	11.0	20.0	26.5	22.5	8.0	4000	60IN4330(1)30(2)	R60IN4330(1)30(2)
250	160	1.5	9.0	17.0	32.0	27.5	5.0	2500	60IR4150(1)30(2)	R60IR4150(1)30(2)
250	160	1.5	13.0	12.0	32.0	27.5	5.0	2500	60IR4150(1)L0(2)	R60IR4150(1)L0(2)
250	160	2.2	9.0	17.0	32.0	27.5	5.0	2500	60IR4220(1)30(2)	R60IR4220(1)30(2)
250	160	2.2	13.0	12.0	32.0	27.5	5.0	2500	60IR4220(1)L0(2)	R60IR4220(1)L0(2)
250	160	3.3	9.0	17.0	32.0	27.5	5.0	2500	60IR4330(1)40(2)	R60IR4330(1)40(2)
250	160	3.3	13.0	12.0	32.0	27.5	5.0	2500	60IR4330(1)L0(2)	R60IR4330(1)L0(2)
250	160	4.7	9.0	17.0	32.0	27.5	5.0	2500	60IR4470(1)40(2)	R60IR4470(1)40(2)
250	160	4.7	24.0	15.0	32.0	27.5	5.0	2500	60IR4470(1)L0(2)	R60IR4470(1)L0(2)
250	160	6.8	11.0	20.0	32.0	27.5	5.0	2500	60IR4680(1)40(2)	R60IR4680(1)40(2)
250	160	10.0	13.0	22.0	32.0	27.5	5.0	2500	60IR5100(1)40(2)	R60IR5100(1)40(2)
250	160	10.0	24.0	15.0	32.0	27.5	5.0	2500	60IR5100(1)L0(2)	R60IR5100(1)L0(2)
250	160	15.0	14.0	28.0	32.0	27.5	5.0	2500	60IR5150(1)40(2)	R60IR5150(1)40(2)
250	160	22.0	18.0	33.0	32.0	27.5	5.0	2500	60IR5220(1)00(2)	R60IR5220(1)00(2)
250	160	33.0	22.0	37.0	32.0	27.5	5.0	2500	60IR5330(1)00(2)	R60IR5330(1)00(2)
250	160	4.7	11.0	22.0	41.5	37.5	4.0	2000	60IW4470(1)30(2)	R60IW4470(1)30(2)
250	160	6.8	11.0	22.0	41.5	37.5	4.0	2000	60IW4680(1)40(2)	R60IW4680(1)40(2)
250	160	10.0	11.0	22.0	41.5	37.5	4.0	2000	60IW5100(1)40(2)	R60IW5100(1)40(2)
250	160	10.0	24.0	15.0	41.5	37.5	4.0	2000	60IW5100(1)L0(2)	R60IW5100(1)L0(2)
250	160	15.0	13.0	24.0	41.5	37.5	4.0	2000	60IW5150(1)40(2)	R60IW5150(1)40(2)
250	160	15.0	24.0	15.0	41.5	37.5	4.0	2000	60IW5150(1)L0(2)	R60IW5150(1)L0(2)
VDC	**VAC**	**Capacitance Value (µF)**	**T (mm)**	**H (mm)**	**L (mm)**	**Lead Spacing**	**dV/dt (V/µs)**	**Max K_0 (V^2/µs)**	**KEMET Internal Part Number**	**Customer Part Number**

(1) Insert lead and packaging code. See Ordering Options Table for available options.
(2) J = 5%, K = 10%, M = 20%
(3) K = 10%, M = 20%

Table 1B – Ratings & Part Number Reference (Wound Capacitor Technology) cont.

VDC	VAC	Capacitance Value (µF)	Dimensions in mm			Lead Spacing (S)	dV/dt (V/µs)	Maximum K_0 (V^2/µs)	KEMET Internal Part Number	Customer Part Number
			T	H	L					
250	160	22.0	20.0	40.0	41.5	37.5	4.0	2000	60IW5220(1)30(2)	R60IW5220(1)30(2)
250	160	22.0	16.0	28.5	41.5	37.5	4.0	2000	60IW5220(1)40(2)	R60IW5220(1)40(2)
250	160	33.0	19.0	32.0	41.5	37.5	4.0	2000	60IW5330(1)40(2)	R60IW5330(1)40(2)
250	160	47.0	20.0	40.0	41.5	37.5	4.0	2000	60IW5470(1)00(2)	R60IW5470(1)00(2)
250	160	68.0	24.0	44.0	41.5	37.5	4.0	2000	60IW5680(1)00(2)	R60IW5680(1)00(2)
400	200	0.022	5.0	11.0	18.0	15.0	20.0	16000	60MI2220(1)30(2)	R60MI2220(1)30(2)
400	200	0.047	5.0	11.0	18.0	15.0	20.0	16000	60MI2470(1)30(2)	R60MI2470(1)30(2)
400	200	0.068	5.0	11.0	18.0	15.0	20.0	16000	60MI2680(1)30(2)	R60MI2680(1)30(2)
400	200	0.10	5.0	11.0	18.0	15.0	20.0	16000	60MI3100(1)30(2)	R60MI3100(1)30(2)
400	200	0.15	5.0	11.0	18.0	15.0	20.0	16000	60MI3150(1)30(2)	R60MI3150(1)30(2)
400	200	0.22	5.0	11.0	18.0	15.0	20.0	16000	60MI3220(1)40(2)	R60MI3220(1)40(2)
400	200	0.22	6.0	12.0	18.0	15.0	20.0	16000	60MI3220(1)30(2)	R60MI3220(1)30(2)
400	200	0.33	7.5	13.5	18.0	15.0	20.0	16000	60MI3330(1)30(2)	R60MI3330(1)30(2)
400	200	0.33	9.0	12.5	18.0	15.0	20.0	16000	60MI3330(1)L0(2)	R60MI3330(1)L0(2)
400	200	0.47	7.5	13.5	18.0	15.0	20.0	16000	60MI3470(1)40(2)	R60MI3470(1)40(2)
400	200	0.47	8.5	14.5	18.0	15.0	20.0	16000	60MI3470(1)30(2)	R60MI3470(1)30(2)
400	200	0.47	9.0	12.5	18.0	15.0	20.0	16000	60MI3470(1)L1(2)	R60MI3470(1)L1(2)
400	200	0.47	13.0	12.0	18.0	15.0	20.0	16000	60MI3470(1)L0(2)	R60MI3470(1)L0(2)
400	200	0.68	10.0	16.0	18.0	15.0	20.0	16000	60MI3680(1)40(2)	R60MI3680(1)40(2)
400	200	0.68	11.0	19.0	18.0	15.0	20.0	16000	60MI3680(1)30(2)	R60MI3680(1)30(2)
400	200	0.68	13.0	12.0	18.0	15.0	20.0	16000	60MI3680(1)L0(2)	R60MI3680(1)L0(2)
400	200	1.0	11.0	19.0	18.0	15.0	20.0	16000	60MI4100(1)30(2)	R60MI4100(1)30(2)
400	200	0.22	6.0	15.0	26.5	22.5	10.0	8000	60MN3220(1)30(2)	R60MN3220(1)30(2)
400	200	0.33	6.0	15.0	26.5	22.5	10.0	8000	60MN3330(1)30(2)	R60MN3330(1)30(2)
400	200	0.47	6.0	15.0	26.5	22.5	10.0	8000	60MN3470(1)30(2)	R60MN3470(1)30(2)
400	200	0.68	6.0	15.0	26.5	22.5	10.0	8000	60MN3680(1)40(2)	R60MN3680(1)40(2)
400	200	0.68	7.0	16.0	26.5	22.5	10.0	8000	60MN3680(1)30(2)	R60MN3680(1)30(2)
400	200	1.0	8.5	17.0	26.5	22.5	10.0	8000	60MN4100(1)40(2)	R60MN4100(1)40(2)
400	200	1.0	10.0	18.5	26.5	22.5	10.0	8000	60MN4100(1)30(2)	R60MN4100(1)30(2)
400	200	1.5	10.0	18.5	26.5	22.5	10.0	8000	60MN4150(1)40(2)	R60MN4150(1)40(2)
400	200	1.5	11.0	20.0	26.5	22.5	10.0	8000	60MN4150(1)30(2)	R60MN4150(1)30(2)
400	200	2.2	13.0	22.0	26.5	22.5	10.0	8000	60MN4220(1)30(2)	R60MN4220(1)30(2)
400	200	0.68	9.0	17.0	32.0	27.5	8.5	6800	60MR3680(1)30(2)	R60MR3680(1)30(2)
400	200	1.0	9.0	17.0	32.0	27.5	8.5	6800	60MR4100(1)30(2)	R60MR4100(1)30(2)
400	200	1.0	13.0	12.0	32.0	27.5	8.5	6800	60MR4100(1)L0(2)	R60MR4100(1)L0(2)
400	200	1.5	9.0	17.0	32.0	27.5	8.5	6800	60MR4150(1)40(2)	R60MR4150(1)40(2)
400	200	2.2	11.0	20.0	32.0	27.5	8.5	6800	60MR4220(1)40(2)	R60MR4220(1)40(2)
400	200	2.2	24.0	15.0	32.0	27.5	8.5	6800	60MR4220(1)L0(2)	R60MR4220(1)L0(2)
400	200	3.3	13.0	22.0	32.0	27.5	8.5	6800	60MR4330(1)40(2)	R60MR4330(1)40(2)
400	**200**	**3.3**	**24.0**	**15.0**	**32.0**	**27.5**	**8.5**	**6800**	**60MR4330(1)L0(3)**	**R60MR4330(1)L0(3)**
400	200	4.7	14.0	28.0	32.0	27.5	8.5	6800	60MR4470(1)40(2)	R60MR4470(1)40(2)
400	200	6.8	18.0	33.0	32.0	27.5	8.5	6800	60MR4680(1)40(2)	R60MR4680(1)40(2)
400	200	10.0	22.0	37.0	32.0	27.5	8.5	6800	60MR5100(1)40(2)	R60MR5100(1)40(2)
400	200	3.3	11.0	22.0	41.5	37.5	6.0	4800	60MW4330(1)30(2)	R60MW4330(1)30(2)
400	200	3.3	24.0	15.0	41.5	37.5	6.0	4800	60MW4330(1)L0(2)	R60MW4330(1)L0(2)
400	200	4.7	11.0	22.0	41.5	37.5	6.0	4800	60MW4470(1)40(2)	R60MW4470(1)40(2)
400	200	4.7	24.0	15.0	41.5	37.5	6.0	4800	60MW4470(1)L0(2)	R60MW4470(1)L0(2)
400	200	6.8	13.0	24.0	41.5	37.5	6.0	4800	60MW4680(1)40(2)	R60MW4680(1)40(2)
400	200	6.8	24.0	15.0	41.5	37.5	6.0	4800	60MW4680(1)L0(2)	R60MW4680(1)L0(2)
400	200	10.0	16.0	28.5	41.5	37.5	6.0	4800	60MW5100(1)40(2)	R60MW5100(1)40(2)
400	200	15.0	24.0	44.0	41.5	37.5	6.0	4800	60MW5150(1)30(2)	R60MW5150(1)30(2)
400	200	22.0	24.0	44.0	41.5	37.5	6.0	4800	60MW5220(1)40(2)	R60MW5220(1)40(2)
400	200	33.0	30.0	45.0	41.5	37.5	6.0	4800	60MW5330(1)40(2)	R60MW5330(1)40(2)
630	220	0.0047	4.0	9.0	13.0	10.0	40.0	50400	60PF1470(1)30(2)	R60PF1470(1)30(2)
630	220	0.0068	4.0	9.0	13.0	10.0	40.0	50400	60PF1680(1)30(2)	R60PF1680(1)30(2)
630	220	0.010	4.0	9.0	13.0	10.0	40.0	50400	60PF2100(1)30(2)	R60PF2100(1)30(2)
630	220	0.015	4.0	9.0	13.0	10.0	40.0	50400	60PF2150(1)30(2)	R60PF2150(1)30(2)
630	220	0.022	4.0	9.0	13.0	10.0	40.0	50400	60PF2220(1)40(2)	R60PF2220(1)40(2)
VDC	**VAC**	**Capacitance Value (µF)**	**T (mm)**	**H (mm)**	**L (mm)**	**Lead Spacing**	**dV/dt (V/µs)**	**Max K_0 (V^2/µs)**	**KEMET Internal Part Number**	**Customer Part Number**

(1) Insert lead and packaging code. See Ordering Options Table for available options.
(2) J = 5%, K = 10%, M = 20%
(3) K = 10%, M = 20%

Table 1B – Ratings & Part Number Reference (Wound Capacitor Technology) cont.

VDC	VAC	Capacitance Value (µF)	Dimensions in mm			Lead Spacing (S)	dV/dt (V/µs)	Maximum K_0 (V^2/µs)	KEMET Internal Part Number	Customer Part Number
			T	H	L					
630	220	0.022	5.0	11.0	13.0	10.0	40.0	50400	60PF2220(1)30(2)	R60PF2220(1)30(2)
630	220	0.033	5.0	11.0	13.0	10.0	40.0	50400	60PF2330(1)40(2)	R60PF2330(1)40(2)
630	220	0.033	6.0	12.0	13.0	10.0	40.0	50400	60PF2330(1)30(2)	R60PF2330(1)30(2)
630	220	0.047	6.0	12.0	13.0	10.0	40.0	50400	60PF2470(1)30(2)	R60PF2470(1)30(2)
630	220	0.033	5.0	11.0	18.0	15.0	25.0	31500	60PI2330(1)30(2)	R60PI2330(1)30(2)
630	220	0.047	5.0	11.0	18.0	15.0	25.0	31500	60PI2470(1)30(2)	R60PI2470(1)30(2)
630	220	0.068	5.0	11.0	18.0	15.0	25.0	31500	60PI2680(1)40(2)	R60PI2680(1)40(2)
630	220	0.068	6.0	12.0	18.0	15.0	25.0	31500	60PI2680(1)30(2)	R60PI2680(1)30(2)
630	220	0.10	6.0	12.0	18.0	15.0	25.0	31500	60PI3100(1)40(2)	R60PI3100(1)40(2)
630	220	0.10	7.5	13.5	18.0	15.0	25.0	31500	60PI3100(1)30(2)	R60PI3100(1)30(2)
630	220	0.10	9.0	12.5	18.0	15.0	25.0	31500	60PI3100(1)L0(2)	R60PI3100(1)L0(2)
630	220	0.15	7.5	13.5	18.0	15.0	25.0	31500	60PI3150(1)40(2)	R60PI3150(1)40(2)
630	220	0.15	8.5	14.5	18.0	15.0	25.0	31500	60PI3150(1)30(2)	R60PI3150(1)30(2)
630	220	0.22	8.5	14.5	18.0	15.0	25.0	31500	60PI3220(1)40(2)	R60PI3220(1)40(2)
630	220	0.22	10.0	16.0	18.0	15.0	25.0	31500	60PI3220(1)30(2)	R60PI3220(1)30(2)
630	220	0.33	10.0	16.0	18.0	15.0	25.0	31500	60PI3330(1)30(2)	R60PI3330(1)30(2)
630	220	0.10	6.0	15.0	26.5	22.5	12.0	15120	60PN3100(1)30(2)	R60PN3100(1)30(2)
630	220	0.15	6.0	15.0	26.5	22.5	12.0	15120	60PN3150(1)30(2)	R60PN3150(1)30(2)
630	220	0.22	6.0	15.0	26.5	22.5	12.0	15120	60PN3220(1)40(2)	R60PN3220(1)40(2)
630	220	0.22	7.0	16.0	26.5	22.5	12.0	15120	60PN3220(1)30(2)	R60PN3220(1)30(2)
630	220	0.33	7.0	16.0	26.5	22.5	12.0	15120	60PN3330(1)50(2)	R60PN3330(1)50(2)
630	220	0.33	8.5	17.0	26.5	22.5	12.0	15120	60PN3330(1)40(2)	R60PN3330(1)40(2)
630	220	0.33	10.0	18.5	26.5	22.5	12.0	15120	60PN3330(1)30(2)	R60PN3330(1)30(2)
630	220	0.47	10.0	18.5	26.5	22.5	12.0	15120	60PN3470(1)40(2)	R60PN3470(1)40(2)
630	220	0.47	11.0	20.0	26.5	22.5	12.0	15120	60PN3470(1)30(2)	R60PN3470(1)30(2)
630	220	0.68	11.0	20.0	26.5	22.5	12.0	15120	60PN3680(1)40(2)	R60PN3680(1)40(2)
630	220	0.68	13.0	22.0	26.5	22.5	12.0	15120	60PN3680(1)30(2)	R60PN3680(1)30(2)
630	220	0.33	9.0	17.0	32.0	27.5	10.0	12600	60PR3330(1)30(2)	R60PR3330(1)30(2)
630	220	0.33	13.0	12.0	32.0	27.5	10.0	12600	60PR3330(1)L0(2)	R60PR3330(1)L0(2)
630	220	0.47	9.0	17.0	32.0	27.5	10.0	12600	60PR3470(1)40(2)	R60PR3470(1)40(2)
630	220	0.47	13.0	12.0	32.0	27.5	10.0	12600	60PR3470(1)L0(2)	R60PR3470(1)L0(2)
630	220	0.68	11.0	20.0	32.0	27.5	10.0	12600	60PR3680(1)40(2)	R60PR3680(1)40(2)
630	220	0.68	24.0	15.0	32.0	27.5	10.0	12600	60PR3680(1)L0(2)	R60PR3680(1)L0(2)
630	220	1.0	11.0	20.0	32.0	27.5	10.0	12600	60PR4100(1)50(2)	R60PR4100(1)50(2)
630	220	1.0	24.0	15.0	32.0	27.5	10.0	12600	60PR4100(1)L0(2)	R60PR4100(1)L0(2)
630	220	1.5	18.0	33.0	32.0	27.5	10.0	12600	60PR4150(1)30(2)	R60PR4150(1)30(2)
630	220	1.5	24.0	15.0	32.0	27.5	10.0	12600	60PR4150(1)L0(2)	R60PR4150(1)L0(2)
630	220	2.2	18.0	33.0	32.0	27.5	10.0	12600	60PR4220(1)40(2)	R60PR4220(1)40(2)
630	220	3.3	22.0	37.0	32.0	27.5	10.0	12600	60PR4330(1)40(2)	R60PR4330(1)40(2)
630	220	4.7	22.0	37.0	32.0	27.5	10.0	12600	60PR4470(1)40(2)	R60PR4470(1)40(2)
630	220	1.0	11.0	22.0	41.5	37.5	8.0	10080	60PW4100(1)30(2)	R60PW4100(1)30(2)
630	220	1.5	11.0	22.0	41.5	37.5	8.0	10080	60PW4150(1)40(2)	R60PW4150(1)40(2)
630	220	1.5	24.0	15.0	41.5	37.5	8.0	10080	60PW4150(1)L0(2)	R60PW4150(1)L0(2)
630	220	2.2	13.0	24.0	41.5	37.5	8.0	10080	60PW4220(1)40(2)	R60PW4220(1)40(2)
630	220	2.2	24.0	15.0	41.5	37.5	8.0	10080	60PW4220(1)L0(2)	R60PW4220(1)L0(2)
630	220	3.3	16.0	28.5	41.5	37.5	8.0	10080	60PW4330(1)40(2)	R60PW4330(1)40(2)
630	220	3.3	24.0	19.0	41.5	37.5	8.0	10080	60PW4330(1)L0(2)	R60PW4330(1)L0(2)
630	220	4.7	19.0	32.0	41.5	37.5	8.0	10080	60PW4470(1)40(2)	R60PW4470(1)40(2)
630	220	6.8	20.0	40.0	41.5	37.5	8.0	10080	60PW4680(1)00(2)	R60PW4680(1)00(2)
630	220	10.0	24.0	44.0	41.5	37.5	8.0	10080	60PW5100(1)40(2)	R60PW5100(1)40(2)
1000	250	0.0010	4.0	9.0	13.0	10.0	60.0	120000	60QF1100(1)01(2)	R60QF1100(1)01(2)
1000	250	0.0015	4.0	9.0	13.0	10.0	60.0	120000	60QF1150(1)01(2)	R60QF1150(1)01(2)
1000	250	0.0022	4.0	9.0	13.0	10.0	60.0	120000	60QF1220(1)01(2)	R60QF1220(1)01(2)
1000	250	0.0033	4.0	9.0	13.0	10.0	60.0	120000	60QF1330(1)01(2)	R60QF1330(1)01(2)
1000	250	0.0047	5.0	11.0	13.0	10.0	60.0	120000	60QF1470(1)01(2)	R60QF1470(1)01(2)
1000	250	0.0068	6.0	12.0	13.0	10.0	60.0	120000	60QF1680(1)01(2)	R60QF1680(1)01(2)
1000	250	0.010	5.0	11.0	18.0	15.0	30.0	60000	60QI2100(1)00(2)	R60QI2100(1)00(2)
1000	250	0.015	5.0	11.0	18.0	15.0	30.0	60000	60QI2150(1)30(2)	R60QI2150(1)30(2)
VDC	**VAC**	**Capacitance Value (µF)**	**T (mm)**	**H (mm)**	**L (mm)**	**Lead Spacing**	**dV/dt (V/µs)**	**Max K_0 (V^2/µs)**	**KEMET Internal Part Number**	**Customer Part Number**

(1) Insert lead and packaging code. See Ordering Options Table for available options.
(2) J = 5%, K = 10%, M = 20%
(3) K = 10%, M = 20%

Table 1B – Ratings & Part Number Reference (Wound Capacitor Technology) cont.

VDC	VAC	Capacitance Value (µF)	Dimensions in mm			Lead Spacing (S)	dV/dt (V/µs)	Maximum K_0 (V^2/µs)	KEMET Internal Part Number	Customer Part Number
			T	H	L					
1000	250	0.022	6.0	12.0	18.0	15.0	30.0	60000	60QI2220(1)30(2)	R60QI2220(1)30(2)
1000	250	0.033	7.5	13.5	18.0	15.0	30.0	60000	60QI2330(1)30(2)	R60QI2330(1)30(2)
1000	250	0.033	9.0	12.5	18.0	15.0	30.0	60000	60QI2330(1)L0(2)	R60QI2330(1)L0(2)
1000	250	0.047	10.0	16.0	18.0	15.0	30.0	60000	60QI2470(1)00(2)	R60QI2470(1)00(2)
1000	250	0.047	13.0	12.0	18.0	15.0	30.0	60000	60QI2470(1)L0(2)	R60QI2470(1)L0(2)
1000	250	0.068	11.0	19.0	18.0	15.0	30.0	60000	60QI2680(1)00(2)	R60QI2680(1)00(2)
1000	250	0.033	6.0	15.0	26.5	22.5	15.0	30000	60QN2330(1)00(2)	R60QN2330(1)00(2)
1000	250	0.047	6.0	15.0	26.5	22.5	15.0	30000	60QN2470(1)00(2)	R60QN2470(1)00(2)
1000	250	0.068	7.0	16.0	26.5	22.5	15.0	30000	60QN2680(1)30(2)	R60QN2680(1)30(2)
1000	250	0.10	8.5	17.0	26.5	22.5	15.0	30000	60QN3100(1)30(2)	R60QN3100(1)30(2)
1000	250	0.15	13.0	22.0	26.5	22.5	15.0	30000	60QN3150(1)00(2)	R60QN3150(1)00(2)
1000	250	0.15	9.0	17.0	32.0	27.5	12.0	24000	60QR3150(1)30(2)	R60QR3150(1)30(2)
1000	250	0.22	9.0	17.0	32.0	27.5	12.0	24000	60QR3220(1)40(2)	R60QR3220(1)40(2)
1000	250	0.33	11.0	20.0	32.0	27.5	12.0	24000	60QR3330(1)40(2)	R60QR3330(1)40(2)
1000	250	0.33	24.0	15.0	32.0	27.5	12.0	24000	60QR3330(1)L0(2)	R60QR3330(1)L0(2)
1000	250	0.47	13.0	22.0	32.0	27.5	12.0	24000	60QR3470(1)40(2)	R60QR3470(1)40(2)
1000	250	0.47	24.0	15.0	32.0	27.5	12.0	24000	60QR3470(1)L0(2)	R60QR3470(1)L0(2)
1000	250	0.68	14.0	28.0	32.0	27.5	12.0	24000	60QR3680(1)40(2)	R60QR3680(1)40(2)
1000	250	1.0	18.0	33.0	32.0	27.5	12.0	24000	60QR4100(1)40(2)	R60QR4100(1)40(2)
1000	250	1.5	22.0	37.0	32.0	27.5	12.0	24000	60QR4150(1)40(2)	R60QR4150(1)40(2)
1000	250	0.47	11.0	22.0	41.5	37.5	10.0	20000	60QW3470(1)30(2)	R60QW3470(1)30(2)
1000	250	0.68	11.0	22.0	41.5	37.5	10.0	20000	60QW3680(1)40(2)	R60QW3680(1)40(2)
1000	250	0.68	24.0	15.0	41.5	37.5	10.0	20000	60QW3680(1)L0(2)	R60QW3680(1)L0(2)
1000	250	1.0	16.0	28.5	41.5	37.5	10.0	20000	60QW4100(1)50(2)	R60QW4100(1)50(2)
1000	**250**	**1.0**	**24.0**	**15.0**	**41.5**	**37.5**	**10.0**	**20000**	**60QW4100(1)L0(3)**	**R60QW4100(1)L0(3)**
1000	250	1.0	24.0	19.0	41.5	37.5	10.0	20000	60QW4100(1)L1(2)	R60QW4100(1)L1(2)
1000	250	1.5	19.0	32.0	41.5	37.5	10.0	20000	60QW4150(1)50(2)	R60QW4150(1)50(2)
1000	250	2.2	20.0	40.0	41.5	37.5	10.0	20000	60QW4220(1)30(2)	R60QW4220(1)30(2)
1000	250	3.3	24.0	44.0	41.5	37.5	10.0	20000	60QW4330(1)00(2)	R60QW4330(1)00(2)
1000	**250**	**4.7**	**30.0**	**45.0**	**41.5**	**37.5**	**10.0**	**20000**	**60QW4470(1)40(3)**	**R60QW4470(1)40(3)**
VDC	**VAC**	**Capacitance Value (µF)**	**T (mm)**	**H (mm)**	**L (mm)**	**Lead Spacing**	**dV/dt (V/µs)**	**Max K_0 (V^2/µs)**	**KEMET Internal Part Number**	**Customer Part Number**

(1) Insert lead and packaging code. See Ordering Options Table for available options.
(2) J = 5%, K = 10%, M = 20%
(3) K = 10%, M = 20%

Soldering Process

The implementation of the RoHS directive has resulted in the selection of SnAgCu (SAC) alloys or SnCu alloys as primary solder. This has increased the liquidus temperature from that of 183°C for SnPb eutectic alloy to 217 – 221°C for the new alloys. As a result, the heat stress to the components, even in wave soldering, has increased considerably due to higher pre-heat and wave temperatures. Polypropylene capacitors are especially sensitive to heat (the melting point of polypropylene is 160 – 170°C). Wave soldering can be destructive, especially for mechanically small polypropylene capacitors (with lead spacing of 5 to 15 mm), and great care has to be taken during soldering. The recommended solder profiles from KEMET should be used. Please consult KEMET with any questions. In general, the wave soldering curve from IEC Publication 61760–1 Edition 2, serves as a solid guideline for successful soldering. Please see Figure 1.

Reflow soldering is not recommended for through-hole film capacitors. Exposing capacitors to a soldering profile in excess of the above the recommended limits may result to degradation or permanent damage to the capacitors.

Do not place the polypropylene capacitor through an adhesive curing oven to cure resin for surface mount components. Insert through-hole parts after the curing of surface mount parts. Consult KEMET to discuss the actual temperature profile in the oven, if through-hole components must pass through the adhesive curing process. A maximum two soldering cycles is recommended. Please allow time for the capacitor surface temperature to return to a normal temperature before the second soldering cycle.

Manual Soldering Recommendations

Following is the recommendation for manual soldering with a soldering iron.

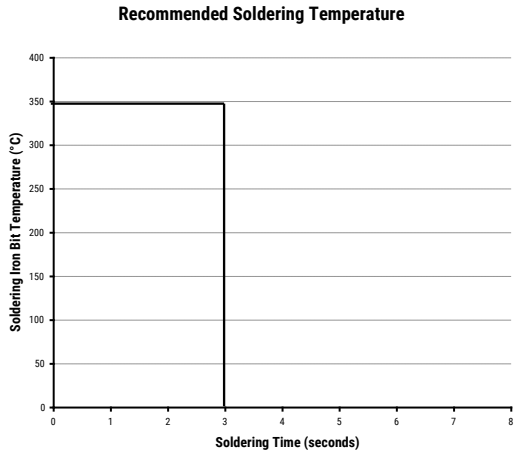

The soldering iron tip temperature should be set at 350°C (+10°C maximum) with the soldering duration not to exceed more than 3 seconds.

Wave Soldering Recommendations

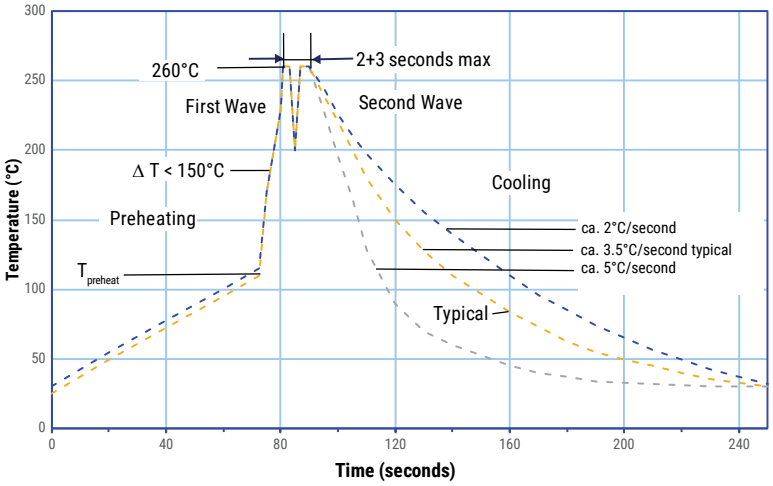

Soldering Process cont.

Wave Soldering Recommendations cont.

1. The table indicates the maximum set-up temperature of the soldering process Figure 1.

Dielectric Film Material	Maximum Preheat Temperature		Maximum Peak Soldering Temperature	
	Capacitor Pitch ≤ 15 mm	Capacitor Pitch > 15 mm	Capacitor Pitch ≤ 15 mm	Capacitor Pitch > 15 mm
Polyester	130°C	130°C	270°C	270°C
Polypropylene	110°C	130°C	260°C	270°C
Paper	130°C	140°C	270°C	270°C
Polyphenylene Sulphide	150°C	160°C	270°C	270°C

2. The maximum temperature measured inside the capacitor:
   Set the temperature so that inside the element the maximum temperature is below the limit:

Dielectric Film Material	Maximum temperature measured inside the element
Polyester	160°C
Polypropylene	110°C
Paper	160°C
Polyphenylene Sulphide	160°C

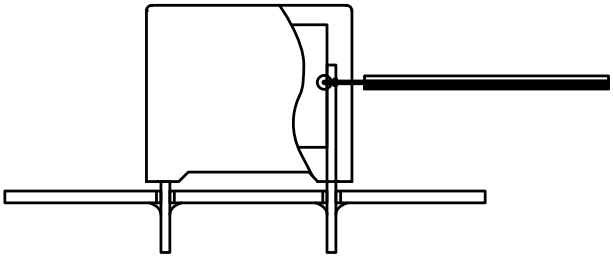

Temperature monitored inside the capacitor.

Selective Soldering Recommendations

Selective dip soldering is a variation of reflow soldering. In this method, the printed circuit board with through-hole components to be soldered is preheated and transported over the solder bath as in normal flow soldering without touching the solder. When the board is over the bath, it is stopped and pre-designed solder pots are lifted from the bath with molten solder only at the places of the selected components, and pressed against the lower surface of the board to solder the components.

The temperature profile for selective soldering is similar to the double wave flow soldering outlined in this document, **however, instead of two baths, there is only one bath with a time from 3 to 10 seconds.** In selective soldering, the risk of overheating is greater than in double wave flow soldering, and great care must be taken so that the parts are not overheated.

Construction

Wound

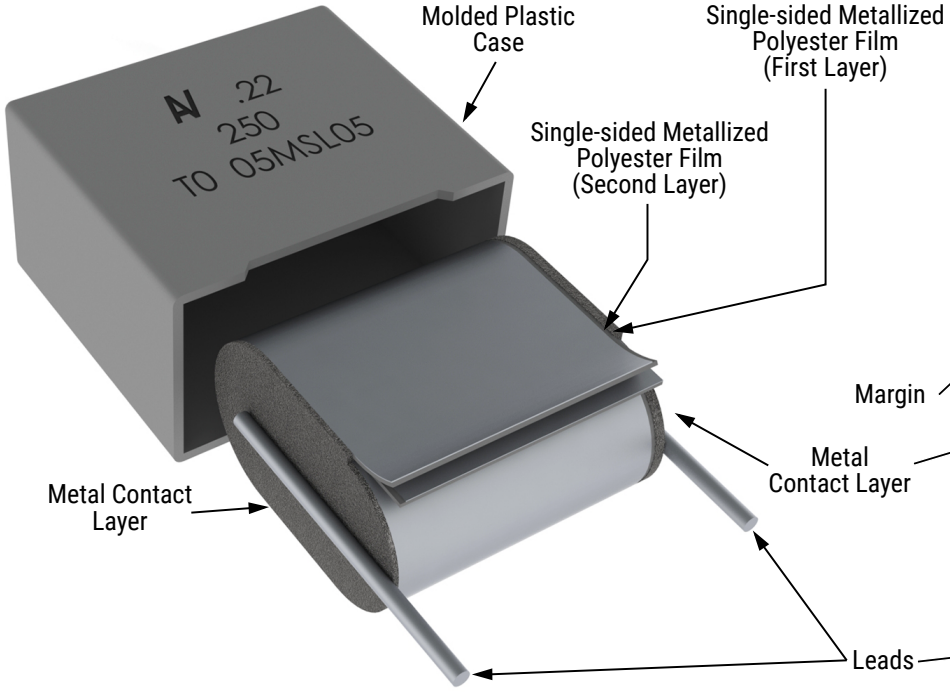

Detailed Cross Section

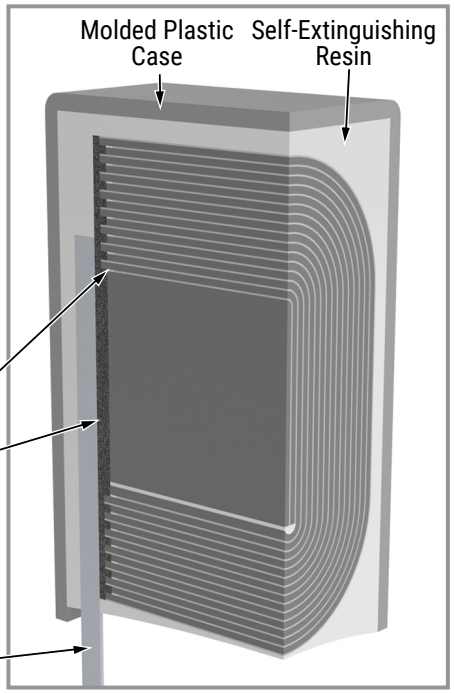

Winding Scheme

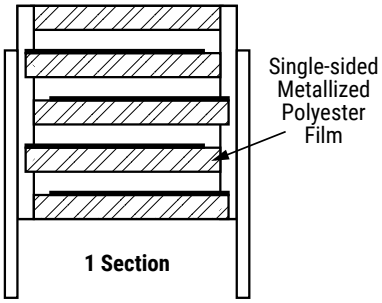

Construction cont.

Stacked

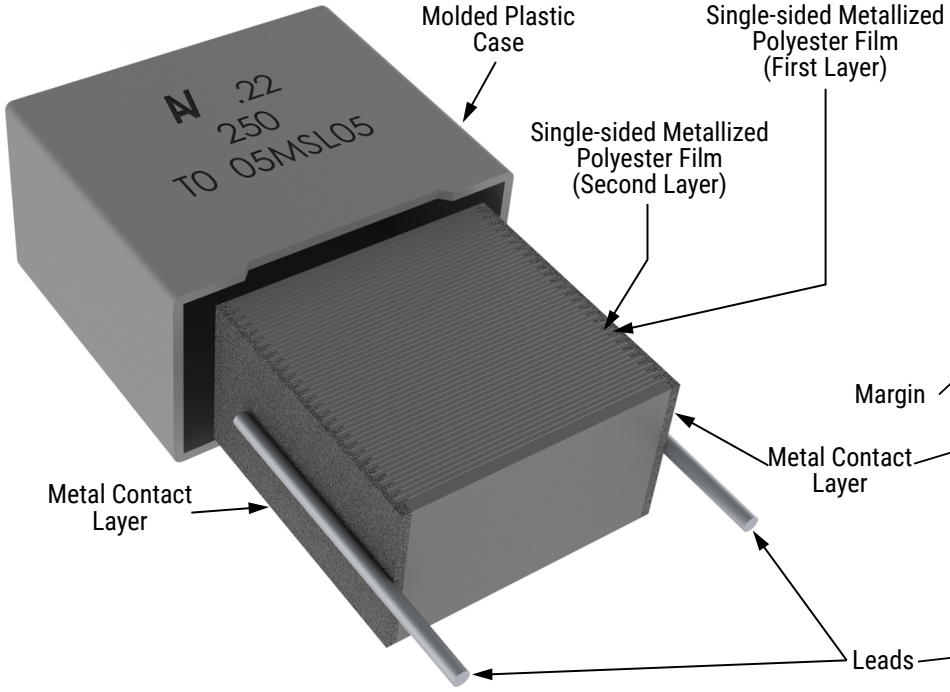

Detailed Cross Section

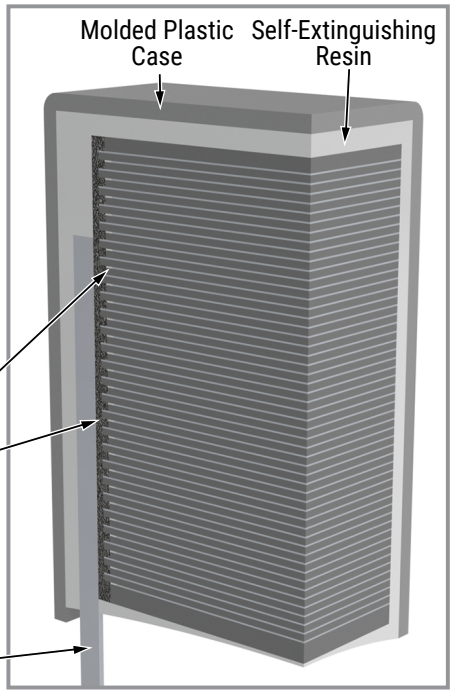

Low Profile Version

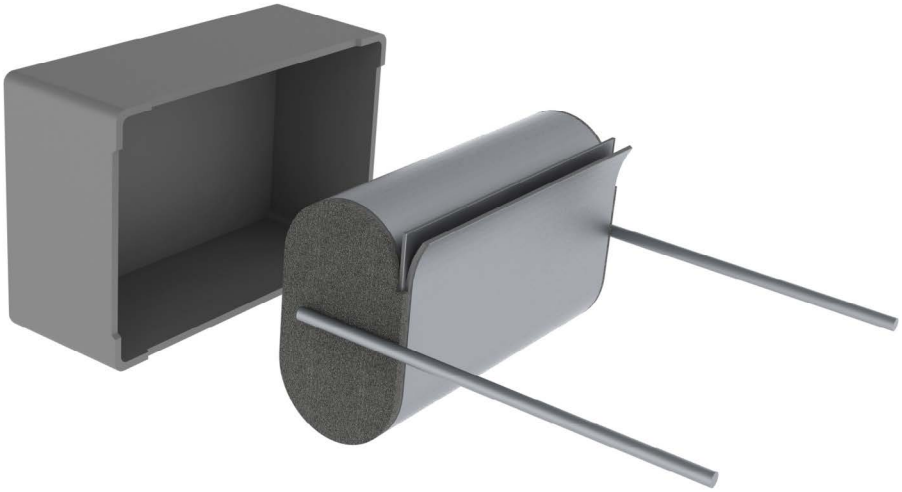

Marking

Pitch Variants - 10, 15, and 22.5

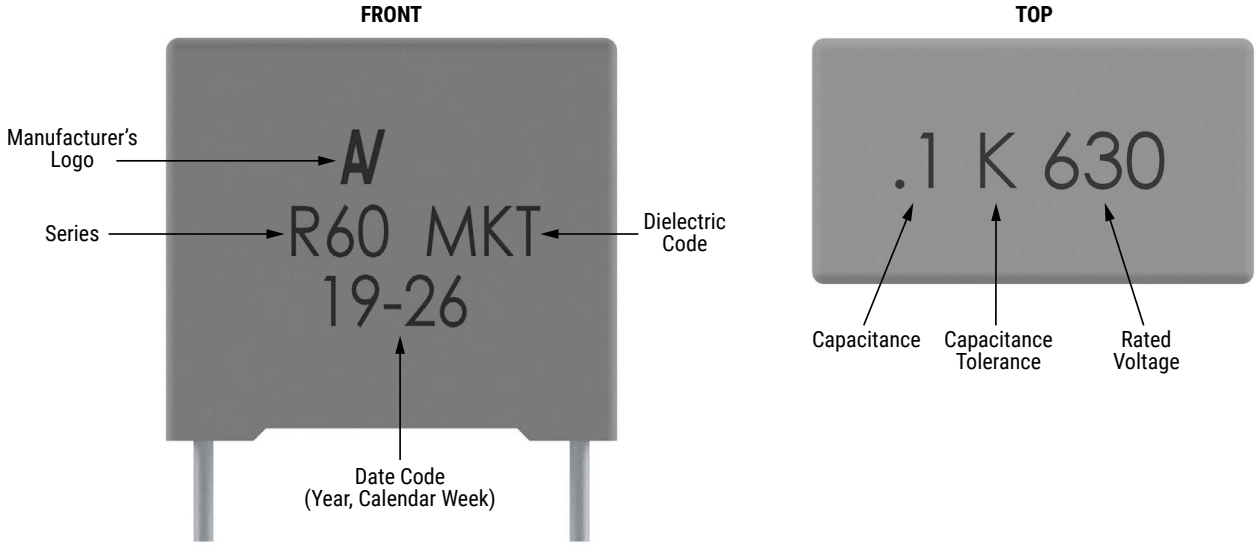

OR

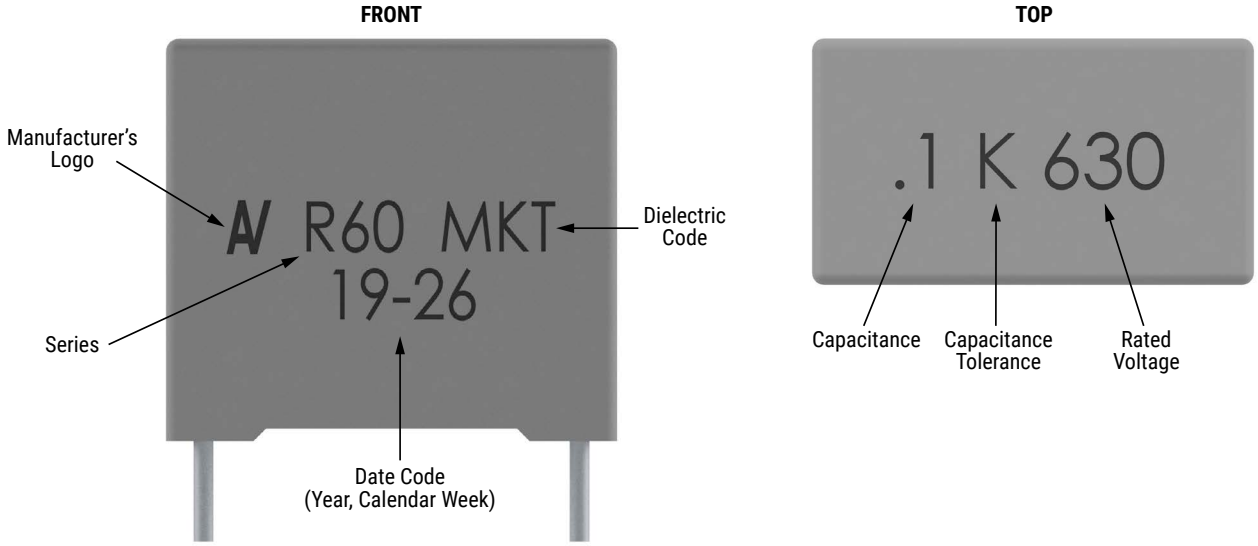

Slight change in the layout can be possible but this does not affect the content of the information of the current marking.
This change will be achieved without impact to product form, fit or function, as the products are equivalent with respect to physical, mechanical, quality and reliability characteristics.

Marking cont.

Pitch Variants - 10 and 15

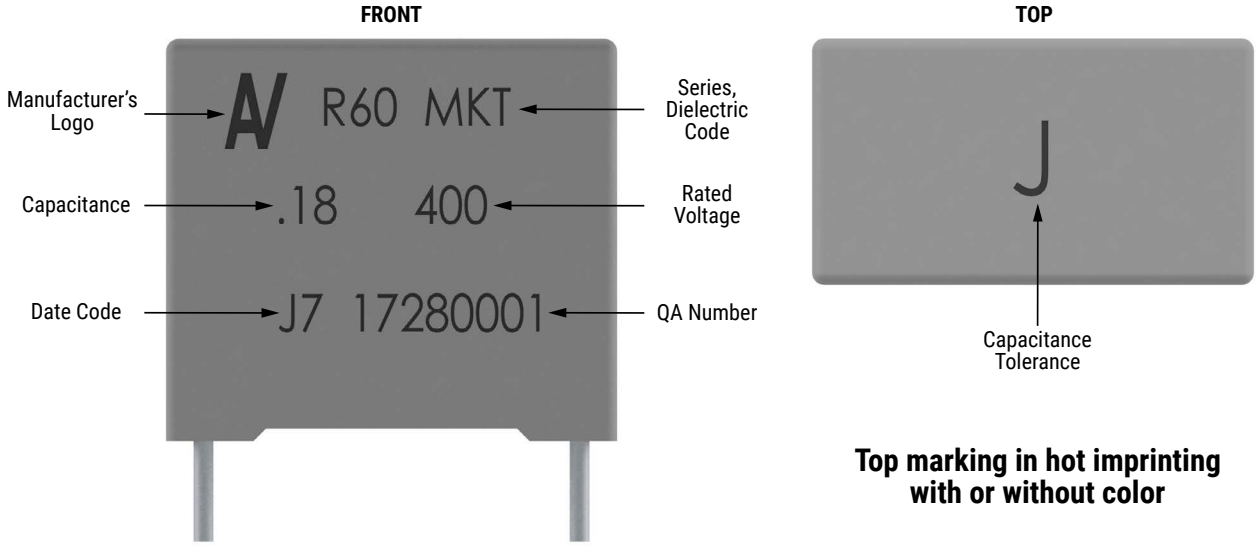

Top marking in hot imprinting with or without color

Pitch Variants - 10, 15, 22.5, 27.5, and 37.5

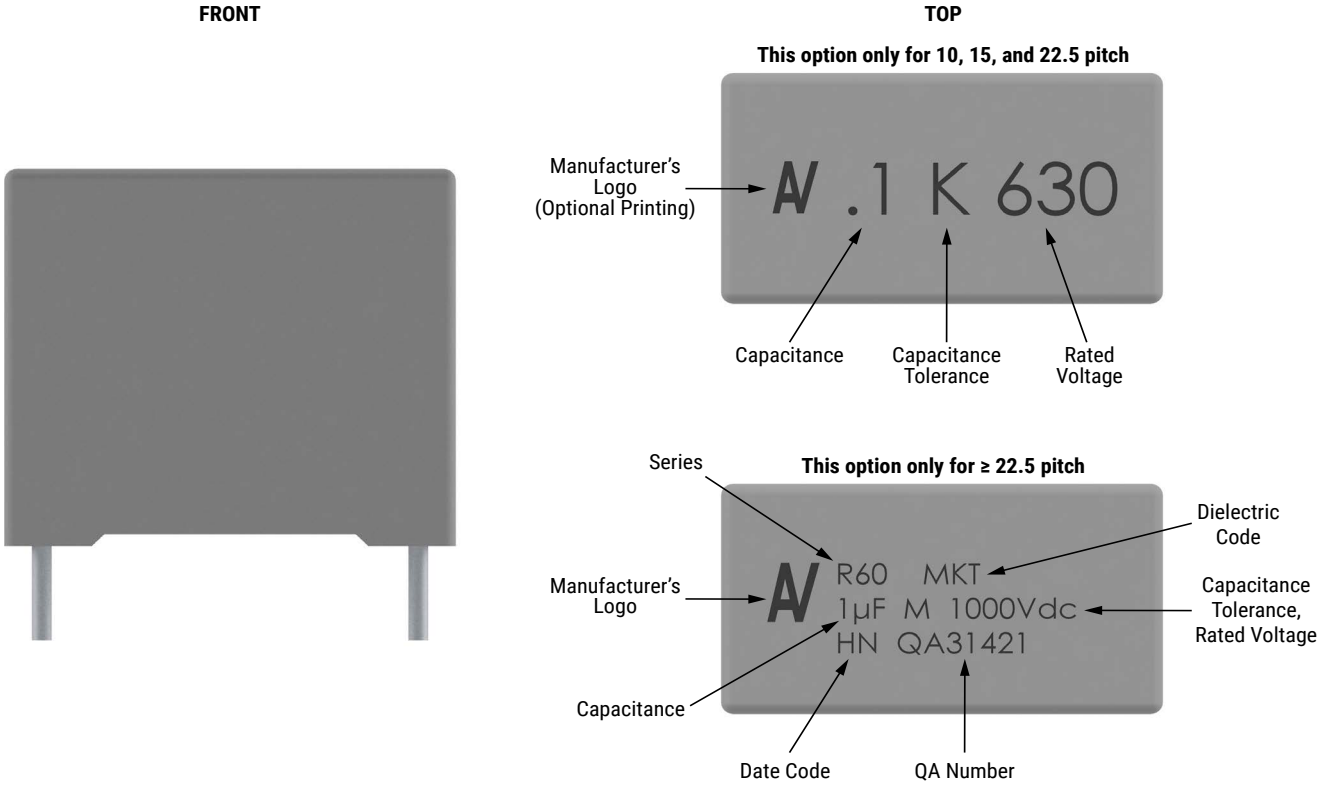

Slight change in the layout can be possible but this does not affect the content of the information of the current marking.
This change will be achieved without impact to product form, fit or function, as the products are equivalent with respect to physical, mechanical, quality and reliability characteristics.

Packaging Quantities

Lead Spacing	Thickness (mm)	Height (mm)	Length (mm)	Bulk Short Leads	Bulk Long Leads			Standard Reel ø 355 mm	Large Reel ø 500 mm	Ammo Taped
	Lead and Packaging Code			AA - JA - JB JE - JH	JC	Z3[1] JM[2]	40[3] – 50	GY	CK	DQ
10	4.0	9.0	13.0	2,000	2,200	2,200	1,800	750	1,500	1,000
	5.0	11.0	13.0	1,300	2,000	2,000	1,500	600	1,250	800
	6.0	12.0	13.0	1,000	1,800	1,800	1,200	500	1,000	680
15	5.0	11.0	18.0	2,000	1,750	1,250	1,000	600	1,250	800
	6.0	12.0	18.0	1,750	1,500	1,000	900	500	1,000	680
	7.5	13.5	18.0	1,000	1,000	800	700	350	800	500
	8.5	14.5	18.0	1,000	750	650	500	300	700	440
	9.0	12.5	18.0	1,000	800	700	520	270	650	410
	10.0	16.0	18.0	750	500	550	500	270	600	380
	11.0	19.0	18.0	450	350	400	350	270	500	340
	13.0	12.0	18.0	750	520	520	490	200	480	280
22.5	6.0	15.0	26.5	805	800	450	500	300	700	464
	7.0	16.0	26.5	700	600	450	500	250	550	380
	8.5	17.0	26.5	468	450	350	300	250	450	280
	10.0	18.5	26.5	396	380	350	300	160	350	235
	11.0	20.0	26.5	360	380	200	250	160	350	217
	13.0	22.0	26.5	300	280	150	200	130	300	-
27.5	9.0	17.0	32.0	816	408	408	408	230	450	-
	11.0	20.0	32.0	560	336	336	336	190	350	-
	13.0	12.0	32.0	672	288	288	288	-	-	-
	13.0	22.0	32.0	480	288	288	288	150	300	-
	14.0	28.0	32.0	352	176	176	176	-	-	-
	18.0	33.0	32.0	256	128	128	128	-	-	-
	22.0	37.0	32.0	168	112	112	112	-	-	-
	24.0	15.0	32.0	336	144	144	144	-	-	-
37.5	11.0	22.0	41.5	420	252	252	252	-	-	-
	13.0	24.0	41.5	360	216	216	216	-	-	-
	16.0	28.5	41.5	216	108	108	108	-	-	-
	19.0	32.0	41.5	192	96	96	96	-	-	-
	20.0	40.0	41.5	126	84	84	84	-	-	-
	24.0	15.0	41.5	252	108	108	108	-	-	-
	24.0	19.0	41.5	216	108	108	108	-	-	-
	24.0	44.0	41.5	108	72	72	72	-	-	-
	30.0	45.0	41.5	90	60	60	60	-	-	-

[1] *Only available for 10 mm lead spacing.*
[2] *Only available for lead spacing ≥ 15 mm.*
[3] *Not available for Stacked Capacitor Technology with 10 mm Lead Spacing.*

Lead Taping & Packaging (IEC 60286–2)

Figure 1 — Lead Spacing 10 mm

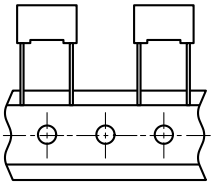

Figure 2 — Lead Spacing 15 mm

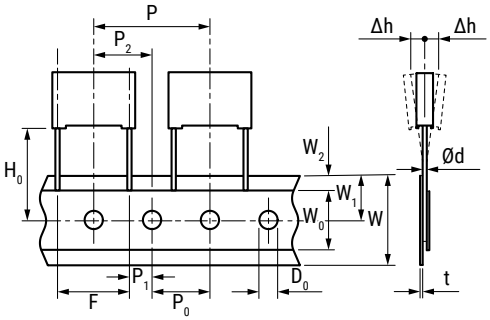

Figure 3 — Lead Spacing 22.5 & 27.5 mm

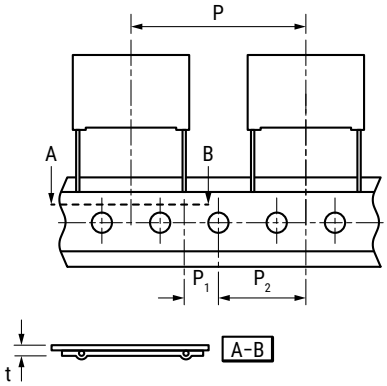

Description	Symbol	Dimensions (mm)				
		Lead Space				Tolerance
		10.0	15.0	22.5	27.5	
		Figure 1	Figure 2	Figure 3	Figure 3	
Lead wire diameter	d	0.6	0.6 – 0.8	0.8	0.8	±0.05
Taping lead space	P	25.4	25.4	38.1	38.1	±1
Feed hole lead space*	P_0	12.7	12.7	12.7	12.7	±0.2 **
Centering of the lead wire	P_1	7.7	5.2	7.8	5.3	±0.7
Centering of the body	P_2	12.7	12.7	19.05	19.05	±1.3
Lead spacing***	F	10.0	15.0	22.5	27.5	+0.6/−0.1
Component alignment	Δh	0	0	0	0	±2
Height of component from tape center	H_0****	18.5	18.5	18.5	18.5	±0.5
Carrier tape width	W	18	18	18	18	+1/−0.5
Hold down tape width	W_0	9	10	10	10	Minimum
Hole position	W_1	9	9	9	9	±0.5
Hold down tape position	W_2	3	3	3	3	Maximum
Feed hole diameter	D_0	4	4	4	4	±0.2
Total tape thickness	t	0.7	0.7	0.7	0.7	±0.2

** Available also 15 mm.*
*** Maximum 1 mm on 20 lead spaces.*
**** Lead Spacing 15 mm and 10 mm taped to 7.5 mm (crimped leads) available upon request.*
***** H = 16.5 mm is available upon request.*

Ammo Specifications

Dimensions in mm		
H	W	T
360	340	59

Reel Specifications

Dimensions in mm		
D	H	W
355	30	55 maximum
500	25	

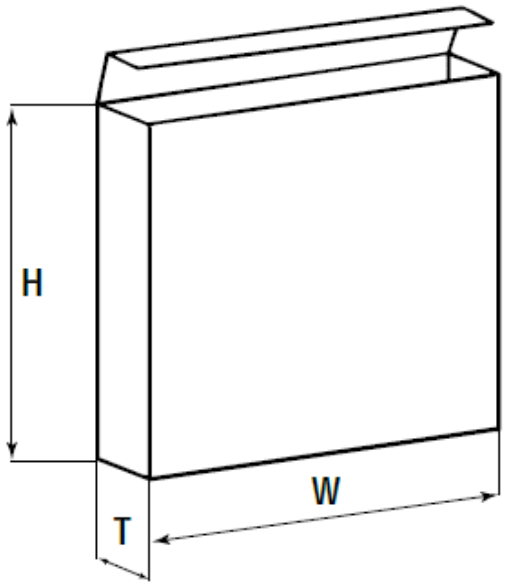

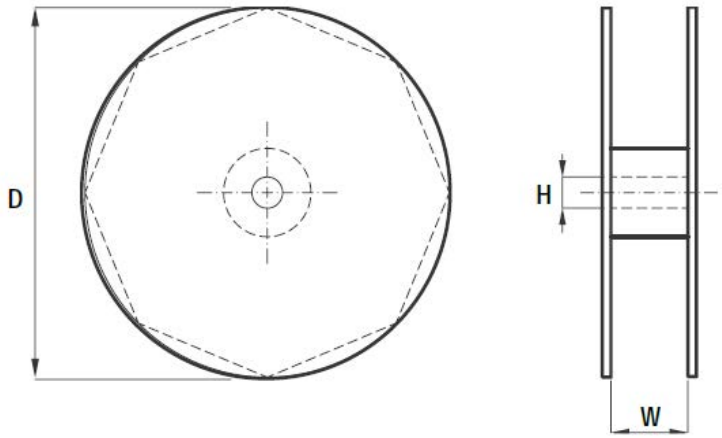

Manufacturing Date Code (IEC-60062)

Manufacturing Date Code (IEC-60062)					
Year	Code	Year	Code	Month	Code
2020	M	2032	C	January	1
2021	N	2033	D	February	2
2022	P	2034	E	March	3
2023	R	2035	F	April	4
2024	S	2036	H	May	5
2025	T	2037	J	June	6
2026	U	2038	K	July	7
2027	V	2039	L	August	8
2028	W	2040	M	September	9
2029	X			October	O
2030	A			November	N
2031	B			December	D

KEMET Electronics Corporation Sales Offices

For a complete list of our global sales offices, please visit https://www.yageogroup.com/SalesResources/SalesOffices

Disclaimer

YAGEO Corporation and its affiliates do not recommend the use of commercial or automotive grade products for high reliability applications or manned space flight.

All product specifications, statements, information and data (collectively, the "Information") in this datasheet are subject to change. The customer is responsible for checking and verifying the extent to which the Information contained in this publication is applicable to an order at the time the order is placed. All Information given herein is believed to be accurate and reliable, but it is presented without guarantee, warranty, or responsibility of any kind, expressed or implied.

Statements of suitability for certain applications are based on KEMET Electronics Corporation's ("KEMET") knowledge of typical operating conditions for such applications, but are not intended to constitute – and KEMET specifically disclaims – any warranty concerning suitability for a specific customer application or use. The Information is intended for use only by customers who have the requisite experience and capability to determine the correct products for their application. Any technical advice inferred from this Information or otherwise provided by KEMET with reference to the use of KEMET's products is given gratis, and KEMET assumes no obligation or liability for the advice given or results obtained.

Although KEMET designs and manufactures its products to the most stringent quality and safety standards, given the current state of the art, isolated component failures may still occur. Accordingly, customer applications which require a high degree of reliability or safety should employ suitable designs or other safeguards (such as installation of protective circuitry or redundancies) in order to ensure that the failure of an electrical component does not result in a risk of personal injury or property damage.

Although all product–related warnings, cautions and notes must be observed, the customer should not assume that all safety measures are indicated or that other measures may not be required.

Additional information about production site flexibility can be found <here>

KEMET is a registered trademark of KEMET Electronics Corporation.