Overview

Multilayer metallized paper, encapsulated and impregnated in self-extinguishing material that meets the requirements of UL 94 V–0.

Automotive grade devices meet the demanding Automotive Electronics Council's AEC–Q200 qualification requirements.

Applications

Safety capacitors for bridging of double or reinforced insulation applications that require a voltage test up to 4,000 VAC at 60 seconds. P295 series capacitors can be left in place during this test.

Benefits

- Approvals: ENEC, UL, cUL, CQC
- Rated voltage: 500 VAC 50/60 Hz
- Capacitance range: 470 – 4,700 pF
- Lead spacing: 15.0 mm
- Capacitance tolerance: ±20%
- Climatic category: 40/115/56/B, IEC 60068–1
- Tape and reel packaging in accordance with IEC 60286–2
- RoHS Compliant and lead-free terminations
- Operating temperature range of −40°C to +115°C
- 100% screening factory test at 4,000 VAC, 50 Hz, 2 seconds
- Highest possible safety regarding active and passive flammability
- Excellent self-healing properties ensure long life even when subjected to frequent over voltages
- Good resistance to ionization due to impregnated dielectric
- High dV/dt capability
- Impregnated paper provides excellent stability and reliability properties, particularly in applications with continuous operation
- Automotive Grade (AEC-Q200)

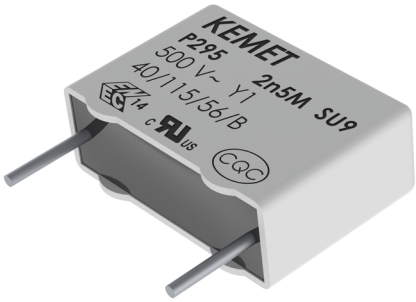

Part Number System

P	295	B	E	471	M	500	A
Capacitor Class	Series	Lead Spacing (mm)	Size Code	Capacitance Code (pF)	Capacitance Tolerance	Rated Voltage (VAC)	Packaging
P = Paper	Y1, Metallized Paper	B = 15.0	See Dimension Table	First two digits represent significant figures. Third digit specifies number of zeros.	J = ±5% K = ±10% M = ±20%	500 = 500	See Ordering Options Table

Ordering Options Table

Lead Spacing Nominal (mm)	Type of Leads and Packaging	Lead Length (mm)	KEMET Part Number (Insert at 14th character)
15	**Standard Lead and Packaging Options**		
	Bulk – Short Leads	6 +0/−1	C
	Bulk – Maximum Length Leads	30 +5/−0	A
	Tape and Reel (Standard Reel Φ = 360 mm)	H_0 = 18.5 +/−0.5	L

Dimensions – Millimeters

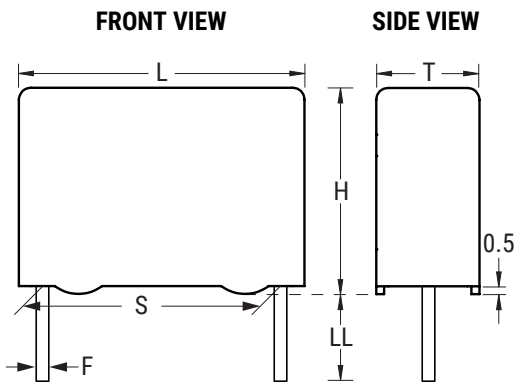

Size Code	S		T		H		L		F	
	Nominal	Tolerance	Nominal	Tolerance	Nominal	Tolerance	Nominal	Tolerance	Nominal	Tolerance
BE	15.0	±0.4	5.5	Maximum	12.5	Maximum	18.0	Maximum	0.8	±0.05
BJ	15.0	±0.4	6.5	Maximum	12.5	Maximum	18.0	Maximum	0.8	±0.05
BL	15.0	±0.4	7.5	Maximum	14.5	Maximum	18.0	Maximum	0.8	±0.05
BQ	15.0	±0.4	8.5	Maximum	16.0	Maximum	18.0	Maximum	0.8	±0.05
Note: See Ordering Options Table for lead length (LL) options.										

Performance Characteristics

Rated Voltage	500 VAC 50/60 Hz	
Capacitance Range	0.00047 – 0.0047 µF	
Capacitance Tolerance	±20%	
Operating Temperature Range	−40°C to +115°C	
Rated Temperature	+115°C	
Climatic Category	40/115/56/B	
Approvals	ENEC, UL, cUL, CQC	
Dissipation Factor	Maximum Values at +23°C	
	1 kHz	1.3%
Test Voltage Between Terminals	The 100% screening factory test is carried out at 4,000 VAC, 50 Hz, 2 seconds. The voltage level is selected to meet the requirements in applicable equipment standards. All electrical characteristics are checked after the test.	
Insulation Resistance	Measured at 500 VDC after 60 seconds, +23°C	
	Minimum Value Between Terminals	
	≥ 12,000 MΩ	
In DC Applications	Recommended voltage ≤ 1,500 VDC	
Resonance Frequency	Tabulated self-resonance frequencies f_0 refer to 5 mm lead length	

Suppression vs. Frequency, Typical Values

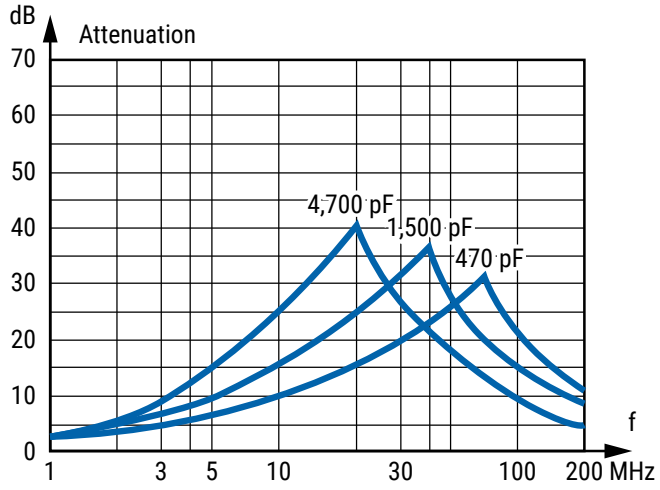

Environmental Test Data

Test	IEC Publication	Procedure
Endurance	IEC 60384–14	1.7 x V_R VAC 50 Hz, once every hour increase to 1,000 VAC for 0.1 second, 1,000 hours at upper rated temperature
Vibration	IEC 60068–2–6 Test Fc	3 directions at 2 hours each 10–500 Hz at 0.75 mm or 98m/second^2
Bump	IEC 60068–2–29 Test Eb	4,000 bumps at 390 m/second^2
Change of Temperature	IEC 60068–2–14 Test Na	Upper and lower rated temperature 5 cycles
Passive Flammability	IEC 60384–14	IEC 60384–1, IEC 60695–11–5 Needle flame test
Damp Heat Steady State	IEC 60068-2-78 Test Cab	+40°C and 93% RH, 56 days
Biased Humidity	IEC 60384-14:2023 Edition 5	+40°C and 93% RH, Rated Voltage, 21 days

Approvals

Certification Body	Mark	Specification	File Number
IMQ S.p.A.		EN/IEC 60384–14	CA08.00252
UL		UL 60384-14 CAN/CSA E60384-14	E73869
CQC		IEC 60384–14	CQC16001145222

Environmental Compliance

All KEMET EMI capacitors are RoHS compliant.

Table 1 – Ratings & Part Number Reference

Capacitance Value (µF)	Maximum Dimensions in mm			Lead Spacing (S)	f_o (MHz)	dV/dt (V/µs)	KEMET Part Number
	T	H	L				
0.00047	5.5	12.5	18.0	15.0	64	2,000	P295BE471(3)500(1)
0.00056	5.5	12.5	18.0	15.0	59	2,000	P295BE561(3)500(1)
0.00068	5.5	12.5	18.0	15.0	54	2,000	P295BE681(3)500(1)
0.00082	5.5	12.5	18.0	15.0	49	2,000	P295BE821(3)500(1)
0.001	5.5	12.5	18.0	15.0	46	2,000	P295BE102(2)500(1)
0.0012	6.5	12.5	18.0	15.0	43	2,000	P295BJ122(2)500(1)
0.0015	6.5	12.5	18.0	15.0	40	2,000	P295BJ152(2)500(1)
0.0018	6.5	12.5	18.0	15.0	37	2,000	P295BJ182(2)500(1)
0.0022	6.5	12.5	18.0	15.0	33	2,000	P295BJ222(2)500(1)
0.0025	7.5	14.5	18.0	15.0	31	2,000	P295BL252(2)500(1)
0.0027	7.5	14.5	18.0	15.0	30	2,000	P295BL272(2)500(1)
0.0033	7.5	14.5	18.0	15.0	27	2,000	P295BL332(2)500(1)
0.0039	8.5	16.0	18.0	15.0	24	2,000	P295BQ392(2)500(1)
0.0047	8.5	16.0	18.0	15.0	22	2,000	P295BQ472(2)500(1)
Capacitance Value (µF)	**T (mm)**	**H (mm)**	**L (mm)**	**Lead Spacing (S)**	**f_o (MHz)**	**dV/dt (V/µs)**	**KEMET Part Number**

(1) Insert ordering code for lead type and packaging. See Ordering Options Table for available options.
(2) Insert tolerance letter (J = ±5%, K = ±10%, M ±20%)
(3) Insert tolerance letter (K = ±10%, M ±20%)

Soldering Process

The implementation of the RoHS directive has resulted in the selection of SnAuCu (SAC) alloys or SnCu alloys as primary solder. This has increased the liquidus temperature from 183ºC for SnPb eutectic alloys to 217 – 221ºC for the new alloys. As a result, the heat stress to the components, even in wave soldering, has increased considerably due to higher pre-heat and wave temperatures. Polypropylene capacitors are especially sensitive to heat (the melting point of polypropylene is 160 – 170ºC). Wave soldering can be destructive, especially for mechanically small polypropylene capacitors (with lead spacing of 5 mm to 15 mm), and great care must be taken during soldering. The recommended solder profiles from KEMET should be used. Consult KEMET with any questions. In general, the wave soldering curve from IEC Publication 61760-1 Edition 2 serves as a solid guideline for successful soldering. See Figure 1.

Reflow soldering is not recommended for through-hole film capacitors. Exposing capacitors to a soldering profile in excess of the recommended limits may result in degradation of or permanent damage to the capacitors.

Do not place the polypropylene capacitor through an adhesive curing oven to cure resin for surface mount components. Insert through-hole parts after the curing of surface mount parts. Consult KEMET to discuss the actual temperature profile in the oven, if through-hole components must pass through the adhesive curing process. A maximum of two soldering cycles is recommended. Allow time for the capacitor surface temperature to return to normal before the second soldering cycle.

Manual Soldering Recommendations

Following is the recommendation for manual soldering with a soldering iron.

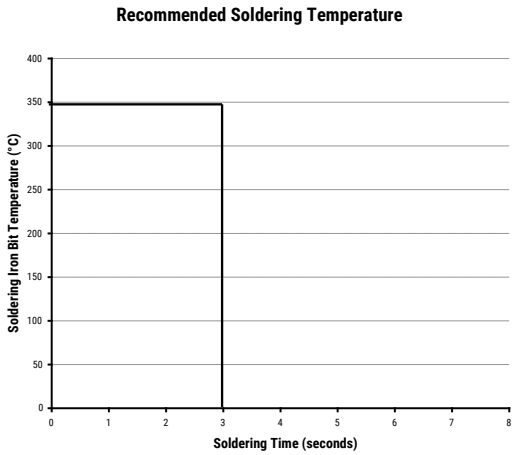

The soldering iron tip temperature should be set at 350°C (+10°C maximum) with the soldering duration not to exceed more than 3 seconds.

Wave Soldering Recommendations

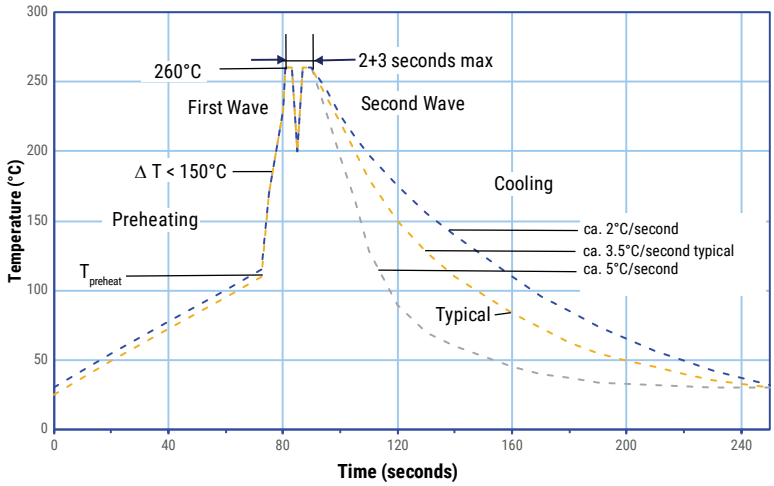

Soldering Process cont.

Wave Soldering Recommendations cont.

1. The table indicates the maximum set-up temperature of the soldering process.

Dielectric film material	Maximum Preheat Temperature		Maximum Peak Soldering Temperature	
	Capacitor Pitch ≤ 15 mm	Capacitor Pitch > 15 mm	Capacitor Pitch ≤ 15 mm	Capacitor Pitch > 15 mm
Polyester	130°C	130°C	270°C	270°C
Polypropylene	110°C	130°C	260°C	270°C
Paper	130°C	140°C	270°C	270°C
Polyphenylene Sulphide	150°C	160°C	270°C	270°C

2. The maximum temperature measured inside the capacitor. Set the temperature so that inside the element the maximum temperature is below the limit:

Dielectric Film Material	Maximum temperature measured inside the element
Polyester	160°C
Polypropylene	110°C
Paper	160°C
Polyphenylene Sulphide	160°C

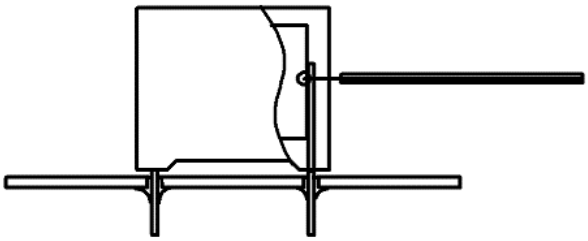

Temperature monitored inside the capacitor.

Selective Soldering Recommendations

Selective dip soldering is a variation of reflow soldering. In this method, the printed circuit board with through-hole components to be soldered is preheated and transported over the solder bath, as in normal flow soldering, without touching the solder. When the board is over the bath, it is stopped. Pre-designed solder pots are lifted from the bath with molten solder only at the places of the selected components, and then pressed against the lower surface of the board to solder the components.

The temperature profile for selective soldering is similar to the double-wave flow soldering outlined in this document. **However, instead of two baths, there is only one with a time from 3 to 10 seconds.** In selective soldering, the risk of overheating is greater than in double-wave flow soldering, and great care must be taken so that the parts do not overheat.

Construction

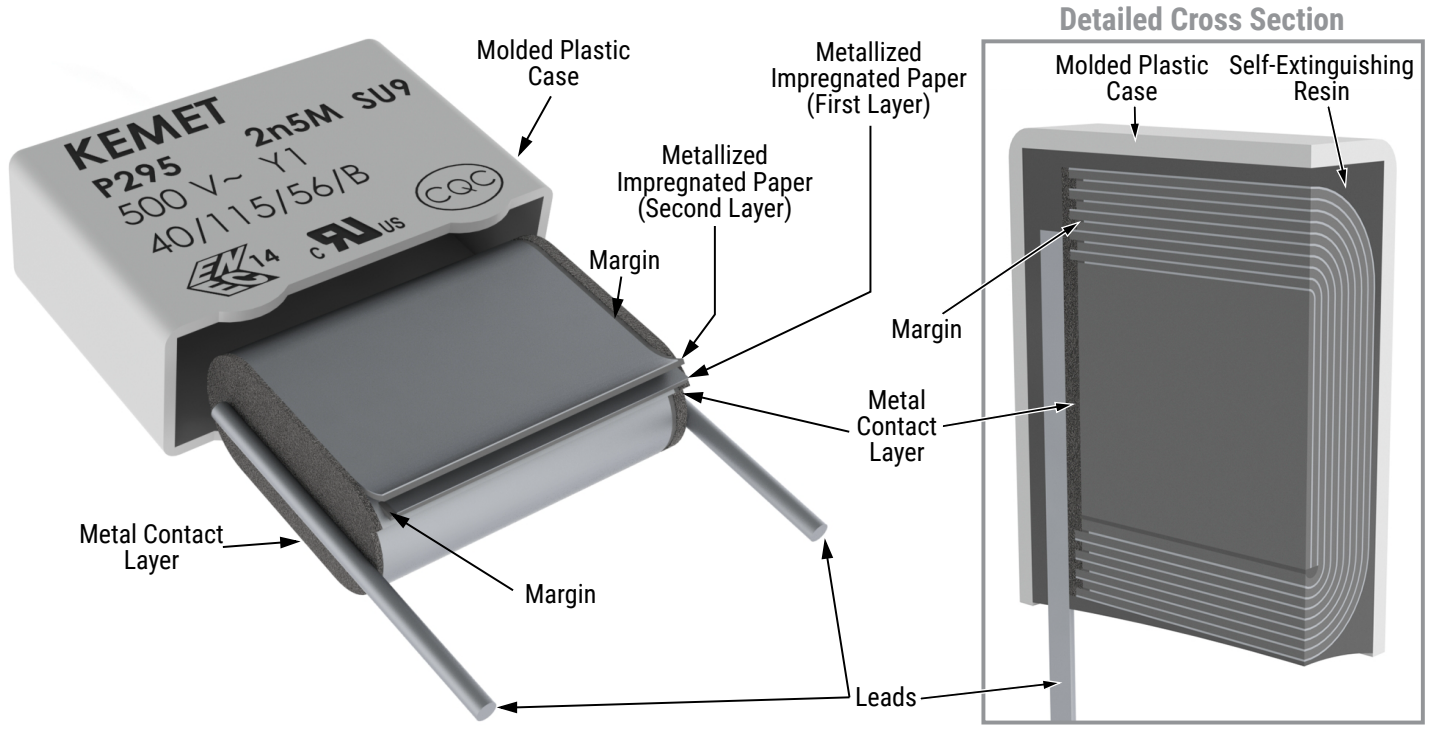

Winding Scheme

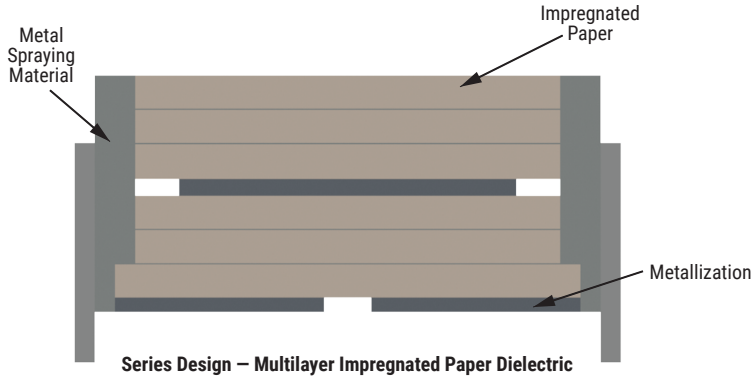

Series Design — Multilayer Impregnated Paper Dielectric 2 Section

Marking

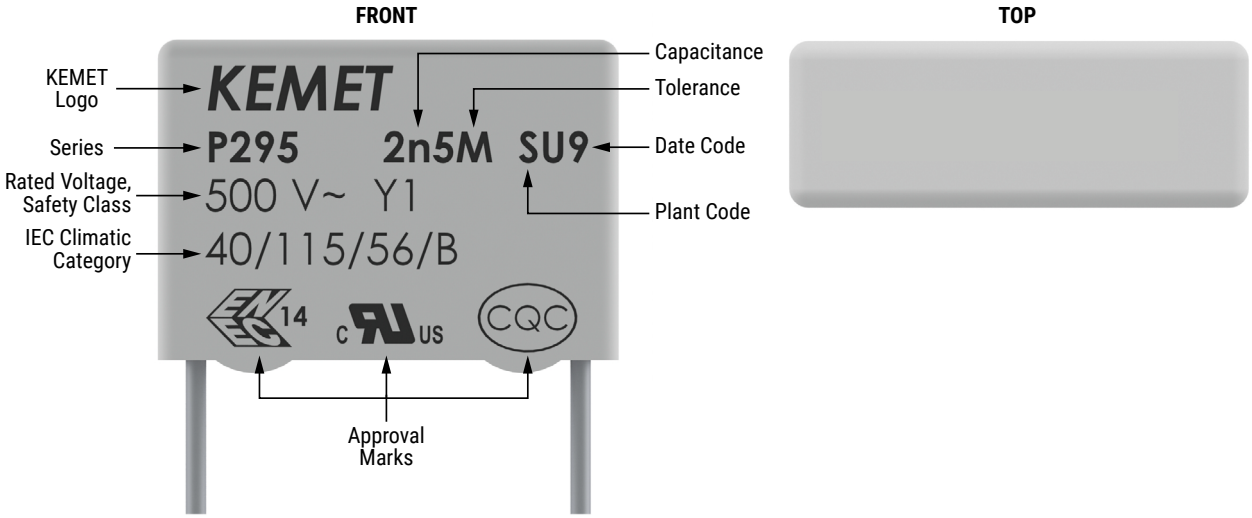

Manufacturing Date Code (IEC 60062)									
Year	Code	Year	Code	Year	Code	Month	Code	Month	Code
2020	M	2027	V	2034	E	January	1	July	7
2021	N	2028	W	2035	F	February	2	August	8
2022	P	2029	X	2036	H	March	3	September	9
2023	R	2030	A	2037	J	April	4	October	O
2024	S	2031	B	2038	K	May	5	November	N
2025	T	2032	C	2039	L	June	6	December	D
2026	U	2033	D	2040	M				

Packaging Quantities

Lead Spacing (mm)	Thickness (mm)	Height (mm)	Length (mm)	Bulk Short Leads	Bulk Long Leads	Standard Reel 360 mm
Lead and Packaging Code				C	A	L
15	5.5	12.5	18	1,000	500	600
	7.5	14.5	18	600	400	400
	6.5	12.5	18	600	400	400
	8.5	16	18	400	250	400

Lead Taping & Packaging (IEC 60286–2)

Lead Spacing 5 mm

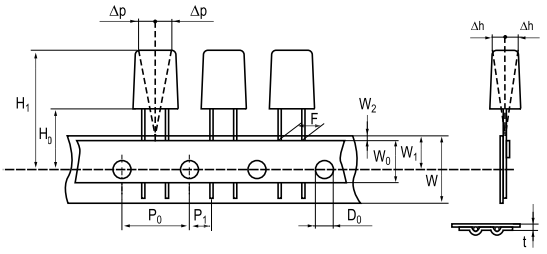

Lead Spacing 7.5 mm

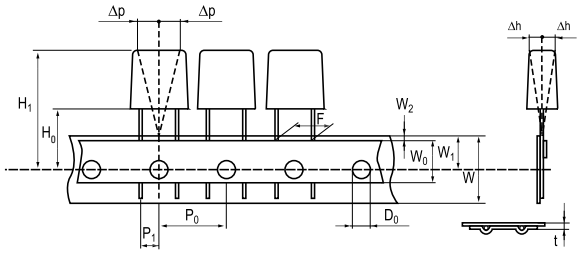

Lead Spacing 10 – 15mm

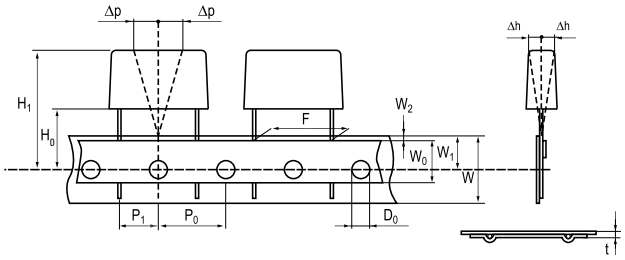

Lead Spacing 22.5 – 27.5 mm

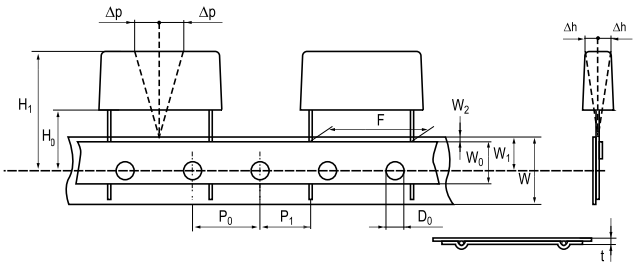

Formed Leads from 10 and 15 mm to 7.5 mm

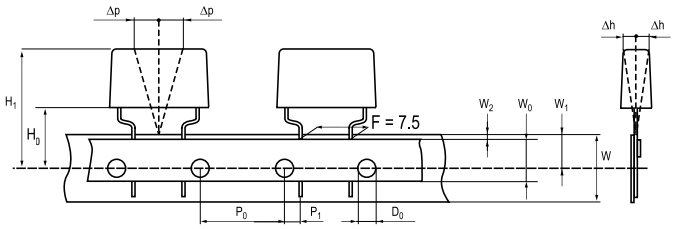

Taping Specification

Dimensions in mm										Standard IEC 60286-2
Lead Spacing	+0.6/−0.1	F	5	7.5	Formed 7.5	10	15	22.5	27.5	F
Carrier Tape Width	±0.5	W	18	18	18	18	18	18	18	18+1/−0.5
Hold-down Tape Width	Minimum	W_0	5	5	5	5	5	5	5	
Position of Sprocket Hole	±0.5	W_1	9	9	9	9	9	9	9	9+0.75/−0.5
Distance Between Tapes	Maximum	W_2	3	3	3	3	3	3	3	3
Sprocket Hole Diameter	±0.2	D_0	4	4	4	4	4	4	4	4
Feed Hole Lead Spacing	±0.3	P_0 (1)	12.7	12.7	12.7 (4)	12.7	12.7	12.7	12.7	12.7
Distance Lead – Feed Hole	±0.7	P_1	3.85	3.75	3.75	7.7	5.2	5.3	5.3	P1
Deviation Tape – Plane	Maximum	Δ p	1.3	1.3	1.3	1.3	1.3	1.3	1.3	1.3
Lateral Deviation	Maximum	Δ h	2	2	2	2	2	2	2	2
Total Thickness	±0.2	t	0.7	0.7	0.7	0.7	0.7	0.9 Maximum	0.9 Maximum	0.9 Maximum
Sprocket Hole/Cap Body	Nominal	H_0 (2)	18.5±0.5	18.5±0.5	18.5±0.5	18.5±0.5	18.5±0.5	18.5±0.5	18.5±0.5	18.0+2/−0
Sprocket Hole/ Top of Cap Body	Maximum	H_1 (3)	32	31	43	43	43	58	58	58 Maximum

(1) Maximum cumulative feed hole error, 1 mm per 20 parts
(2) 16.5 mm available on request
(3) Depending on case size
(4) 15 mm available on request

Lead Taping & Packaging (IEC 60286–2) cont.

Ammo Specifications

Series	Dimensions (mm)		
	H	W	T
P295	330	330	50

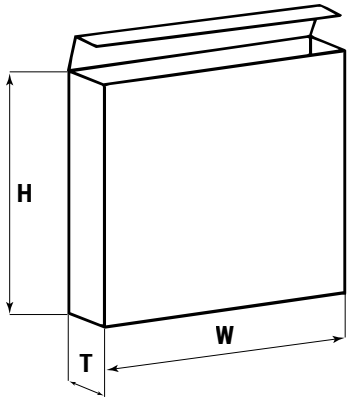

Reel Specifications

Series	Dimensions (mm)		
	D	H	W
P295	360 500	30	46 (Max)

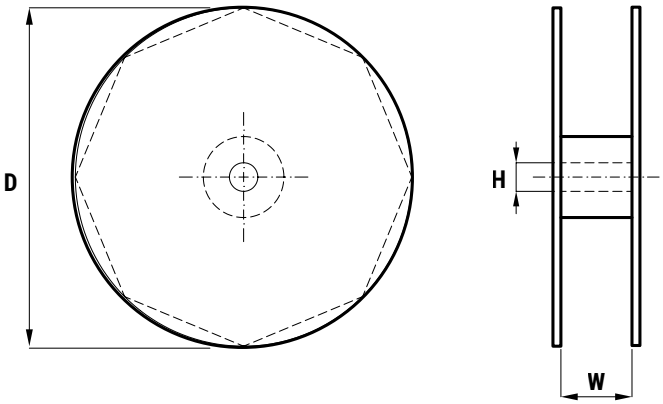

KEMET Electronics Corporation Sales Offices

For a complete list of our global sales offices, please visit https://www.yageogroup.com/SalesResources/SalesOffices

Disclaimer

YAGEO Corporation and its affiliates do not recommend the use of commercial or automotive grade products for high reliability applications or manned space flight.

All product specifications, statements, information and data (collectively, the "Information") in this datasheet are subject to change. The customer is responsible for checking and verifying the extent to which the Information contained in this publication is applicable to an order at the time the order is placed. All Information given herein is believed to be accurate and reliable, but it is presented without guarantee, warranty, or responsibility of any kind, expressed or implied.

Statements of suitability for certain applications are based on KEMET Electronics Corporation's ("KEMET") knowledge of typical operating conditions for such applications, but are not intended to constitute – and KEMET specifically disclaims – any warranty concerning suitability for a specific customer application or use. The Information is intended for use only by customers who have the requisite experience and capability to determine the correct products for their application. Any technical advice inferred from this Information or otherwise provided by KEMET with reference to the use of KEMET's products is given gratis, and KEMET assumes no obligation or liability for the advice given or results obtained.

Although KEMET designs and manufactures its products to the most stringent quality and safety standards, given the current state of the art, isolated component failures may still occur. Accordingly, customer applications which require a high degree of reliability or safety should employ suitable designs or other safeguards (such as installation of protective circuitry or redundancies) in order to ensure that the failure of an electrical component does not result in a risk of personal injury or property damage.

Although all product–related warnings, cautions and notes must be observed, the customer should not assume that all safety measures are indicated or that other measures may not be required.

Additional information about production site flexibility can be found <here>

KEMET is a registered trademark of KEMET Electronics Corporation.