Overview

KEMET's Surface Mount Solid Polymer Aluminum Capacitors offer longer life and greater stability across a wide range of temperatures. This highly conductive solid polymer electrolyte eliminates the risk of drying out and, due to its low ESR properties, is able to withstand higher ripple currents during normal operation. This series is ideally suited for automotive and industrial applications. This series is AEC-Q200 qualified for voltages up to 63 V and upon request for 80 V. Anti-Vibration version is available for 10 mm diameter. See Part Number system to order AEC-Q200 qualified parts. If CV/Size is not available please contact your local Sales Representative for more information.

Applications

Typical applications include long life LED drivers, professional power amplifiers, industrial power supplies, DC/DC converters, voltage regulators, and decoupling. For voltages ≤ 63 V, this series is used for automotive powertrain.

Benefits

- Surface mount form factor
- Ultra low impedance
- High ripple current
- High voltage
- High temperature; 125°C/2,000 hours
- High vibration resistance up to 30 g
- RoHS compliant
- Halogen-free

Standard

Anti-Vibration

Part Number System

A	768	EB	127	M	1D	LA	E	034
Capacitor Class	Series	Size Code	Capacitance Code (pF)	Tolerance	Rated Voltage (VDC)	Packaging	Electrical Parameters	ESR
A = Aluminum	Surface Mount Solid Polymer Aluminum Capacitors 125°C 2,000 hours High Temperature	See Dimension Table	First two digits represent significant figures for capacitance values. Last digit specifies the number of zeros to be added.	M = ±20%	16 = 1C 20 = 1D 25 = 1E 35 = 1V 40 = 1G 50 = 1H 63 = 1J 80 = 1K	LA = Tape & Reel	E = Standard/ESR S = Automotive V = Automotive + Anti-Vibration AEC-Q200 available up to 63 V (80 V upon request)	Last 3 digits represent significant figures for ESR values. (mΩ)

Ordering Options Table

Packaging Type	Packaging Code
Standard Packaging Options	
Tape & Reel	LA
Contact KEMET for other Lead and Packaging options	

Dimensions – Millimeters

Standard

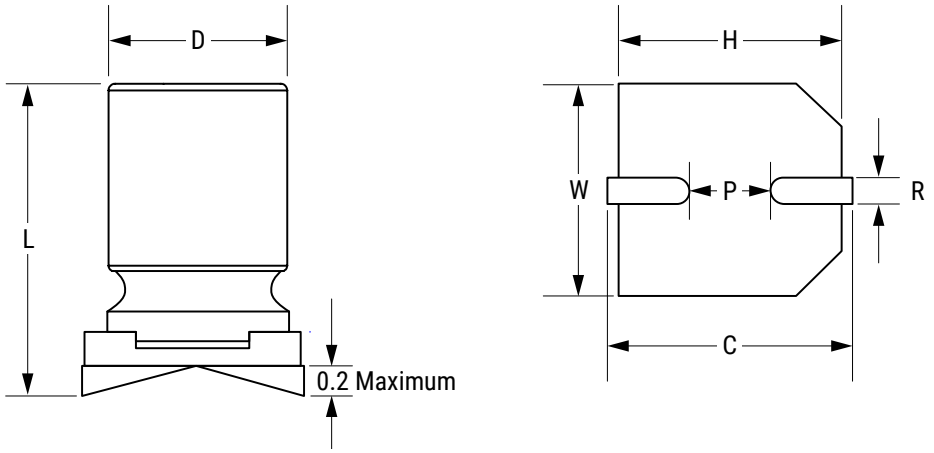

Anti-Vibration

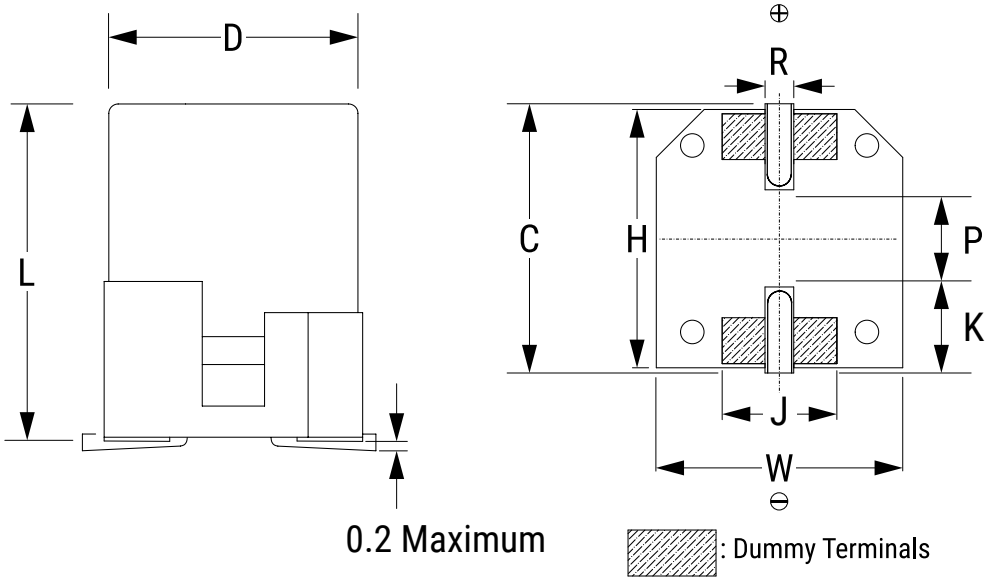

Size Code	D		L		W		H		C		R	P	J	K
	Nominal	Tolerance	Nominal	Tolerance	Nominal	Tolerance	Nominal	Tolerance	Nominal	Tolerance	Range	Nominal	Nominal	Nominal
EB	6.3	±0.5	5.7	±0.3	6.6	±0.2	6.6	±0.2	7.3	±0.2	0.5 – 0.8	2.0	-	-
EB (Anti-Vibration)	6.3	±0.5	5.9	±0.3	6.6	±0.2	6.6	±0.2	7.3	±0.2	0.5 – 0.8	2	2.8	2.6
KE	8	±0.5	6.7	±0.3	8.3	±0.2	8.3	±0.2	9	±0.2	0.5 – 0.8	3.1	-	-
KS	8	±0.5	12.2	±0.3	8.3	±0.2	8.3	±0.2	9	±0.2	0.8 – 1.1	3.1	-	-
KS (Anti-Vibration)	8.0	±0.5	12.4	±0.3	8.3	±0.2	8.8	±0.2	9.2	±0.2	0.7 – 1.1	3.1	4	3
MS	10	±0.5	12.2	±0.5	10.3	±0.2	10.3	±0.2	11	±0.2	0.8 – 1.1	4.6	-	-
MS (Anti-Vibration)	10	±0.5	12.4	±0.5	10.3	±0.2	10.8	±0.2	11.2	±0.2	0.7 – 1.1	4.6	4.4	3.2

Environmental Compliance

All Part Numbers in this datasheet are Reach and RoHS compliant, and Halogen-Free.

As an environmentally conscious company, KEMET is working continuously with improvements concerning the environmental effects of both our capacitors and their production. In Europe (RoHS Directive) and in some other geographical areas like China, legislation has been put in place to prevent the use of some hazardous materials, such as lead (Pb), in electronic equipment. All products in this catalog are produced to help our customers' obligations to guarantee their products and fulfill these legislative requirements. The only material of concern in our products has been lead (Pb), which has been removed from all designs to fulfill the requirement of containing less than 0.1% of lead in any homogeneous material. KEMET will closely follow any changes in legislation worldwide and make any necessary changes in its products, whenever needed.

Some customer segments such as medical, military and automotive electronics may still require the use of lead in electrode coatings. To clarify the situation and distinguish products from each other, a special symbol is used on the packaging labels for RoHS compatible capacitors.

Due to customer requirements, there may appear additional markings such as LF = Lead-free or LFW = Lead-free wires on the label.

Performance Characteristics

Item	Performance Characteristics
Capacitance Range	18 – 1,000 µF
Rated Voltage	16 – 80 VDC
Operating Temperature	−55°C to +125°C
Capacitance Tolerance	±20% at 120 Hz/20°C
Life Test	2,000 hours (see conditions in Test Method & Performance)
Leakage Current	I = 0.2 CV
	C = Rated capacitance (µF), V = Rated voltage (VDC), Voltage applied for 2 minutes at 20°C.

Compensation Factor of Ripple Current (RC) vs. Frequency

Frequency	120 Hz ≤ f < 1 kHz	1 kHz ≤ f < 10 kHz	10 kHz ≤ f < 100 kHz	100 kHz ≤ f < 500 kHz
Coefficient	0.05	0.30	0.70	1.00

Test Method & Performance

Conditions	Load Life Test	Shelf Life Test
Temperature	125°C	125°C
Test Duration	2,000 hours	168 hours
Ripple Current	No ripple current applied	No ripple current applied
Voltage	The sum of DC voltage and the peak AC voltage must not exceed the rated voltage of the capacitor	No voltage applied
Performance	**The following specifications will be satisfied when the capacitor is restored to 20°C.**	
Capacitance Change	Within ±20% of the initial value	
Dissipation Factor	Does not exceed 150% of the specified value	
ESR	Does not exceed 150% of the specified value	
Leakage Current	Does not exceed specified value	
Damp Heat	**The following specifications will be satisfied when the capacitor is restored to 20°C after application of rated voltage for 1,000 hours at 60°C, 90%~95% RH.**	
Capacitance Change	Within ±20% of the initial value	
Dissipation Factor	Does not exceed 150% of the specified value	
ESR	Does not exceed 150% of the specified value	
Leakage Current	Does not exceed specified value	
Surge Voltage (Rated Voltage x 1.15(V))	**The following specifications will be satisfied when the capacitor is subjected to 1,000 cycles, each consisting of charge with the surge voltages specified at 125°C for 30 seconds through a protective resistor (Rc = 1 kΩ) and discharge for 5 minutes, 30 seconds.**	
Capacitance Change	Within ±20% of the initial value	
Dissipation Factor	Does not exceed 150% of the specified value	
ESR	Does not exceed 150% of the specified value	
Leakage Current	Does not exceed specified value	
Resistance to Soldering Heat	**Measurement for solder temperature profile at capacitor top and terminal.**	
Capacitance Change	Within ±10% of the initial value	
Dissipation Factor	Does not exceed 130% of the specified value	
ESR	Does not exceed 130% of the specified value	
Leakage Current	Does not exceed specified value	

Test Method & Performance – Anti-Vibration Version

Anti-Vibration Version	
Vibration Test Specifications	1.5 mm displacement amplitude or 30 g maximum acceleration. Vibration applied for three 4-hour sessions at 10 – 2,000 Hz (capacitor on PCB).
Capacitance Change	Within ±20% of the initial value
Dissipation Factor	Does not exceed 150% of the specified value
ESR	Does not exceed 150% of the specified value
Leakage Current	Does not exceed specified value

Shelf Life & Re-Ageing

Shelf Life
Solderability is 12 months after manufacturing date.

The capacitance, ESR and impedance of a capacitor will not change significantly after extended storage periods, however the leakage current will slowly increase.

• This series should not be stored in high temperatures or where there is a high level of humidity.
• The suitable storage condition is +5 to +35°C and less than 75% in relative humidity.
• Do not store in damp conditions such as water, saltwater spray or oil spray.
• Do not store in an environment of hazardous gas (hydrogen sulphide, sulphurous acid gas, nitrous acid, chlorine gas, ammonium, etc.)
•Do not store under exposure to ozone, ultraviolet rays or radiation.

If a capacitor has been stored for more than 12 months under these conditions and it shows increased leakage current, then a treatment by voltage application is recommended.

Note: The JEDEC-J-STD-020 standard does not apply.

Floor Life
The Capacitor should be soldered within 4 weeks after removal from sealed bag. Reseal the unused capacitors into plastic bags. All parts manufactured from week 1 of year 2022 are packed in sealed plastic bags.

Re-age Procedure
Apply the rated DC voltage to the capacitor at 125°C for a period of 120 minutes through a 1 kΩ series resistor.

Table 1 – Ratings & Part Number Reference

Rated Voltage	Surge Voltage	Rated Capacitance	ESR	Ripple Current	Leakage Current	Case Size	KEMET Part Number		Case Size
(VDC)	(VDC)	120 Hz 20°C (µF)	100 kHz 20°C (mΩ)	100 kHz 125°C (mA)	20°C 2 min (µA)	D x L (mm)	() Represents Part Number Options	Anti-Vibration Version	D x L (mm) Anti-Vibration
16	18.40	470	17	2,500	1,504	8 × 12.2	A768KS477M1CLA(1)017	A768KS477M1CLAV017	8 × 12.4
16	18.40	560	17	2,500	1,792	8 × 12.2	A768KS567M1CLA(1)017	A768KS567M1CLAV017	8 × 12.4
16	18.40	680	15	2,700	2,176	10 × 12.2	A768MS687M1CLA(1)015	A768MS687M1CLAV015	10 × 12.4
16	18.40	1000	15	2,700	3,200	10 × 12.2	A768MS108M1CLA(1)015	A768MS108M1CLAV015	10 × 12.4
20	23.00	120	34	1,300	480	6.3 × 5.7	A768EB127M1DLA(1)034	A768EB127M1DLAV034	6.3 × 5.9
20	23.00	180	29	1,600	720	8 × 6.7	A768KE187M1DLA(1)029	-	-
20	23.00	220	29	1,600	880	8 × 6.7	A768KE227M1DLA(1)029	-	-
20	23.00	390	17	2,400	1,560	8 × 12.2	A768KS397M1DLA(1)017	A768KS397M1DLAV017	8 × 12.4
20	23.00	680	15	2,600	2,720	10 × 12.2	A768MS687M1DLA(1)015	A768MS687M1DLAV015	10 × 12.4
25	28.75	47	42	1,175	235	6.3 × 5.7	A768EB476M1ELA(1)042	A768EB476M1ELAV042	6.3 × 5.9
25	28.75	56	40	1,200	280	6.3 × 5.7	A768EB566M1ELA(1)040	A768EB566M1ELAV040	6.3 × 5.9
25	28.75	82	36	1,255	410	6.3 × 5.7	A768EB826M1ELA(1)036	A768EB826M1ELAV036	6.3 × 5.9
25	28.75	100	36	1,255	500	6.3 × 5.7	A768EB107M1ELA(1)036	A768EB107M1ELAV036	6.3 × 5.9
25	28.75	150	29	1,600	750	8 × 6.7	A768KE157M1ELA(1)029	-	-
25	28.75	180	29	1,600	900	8 × 6.7	A768KE187M1ELA(1)029	-	-
25	28.75	330	19	2,325	1,650	8 × 12.2	A768KS337M1ELA(1)019	A768KS337M1ELAV019	8 × 12.4
25	28.75	390	19	2,325	1,950	8 × 12.2	A768KS397M1ELA(1)019	A768KS397M1ELAV019	8 × 12.4
25	28.75	470	17	2,500	2,350	10 × 12.2	A768MS477M1ELA(1)017	A768MS477M1ELAV017	10 × 12.4
25	28.75	560	17	2,500	2,800	10 × 12.2	A768MS567M1ELA(1)017	A768MS567M1ELAV017	10 × 12.4
35	40.25	47	42	1,175	329	6.3 × 5.7	A768EB476M1VLA(1)042	A768EB476M1VLAV042	6.3 × 5.9
35	40.25	56	42	1,175	392	6.3 × 5.7	A768EB566M1VLA(1)042	A768EB566M1VLAV042	6.3 × 5.9
35	40.25	82	36	1,400	574	8 × 6.7	A768KE826M1VLA(1)036	-	-
35	40.25	100	36	1,400	700	8 × 6.7	A768KE107M1VLA(1)036	-	-
35	40.25	180	24	2,000	1,260	8 × 12.2	A768KS187M1VLA(1)024	A768KS187M1VLAV024	8 × 12.4
35	40.25	220	24	2,000	1,540	8 × 12.2	A768KS227M1VLA(1)024	A768KS227M1VLAV024	8 × 12.4
35	40.25	270	22	2,200	1,890	10 × 12.2	A768MS277M1VLA(1)022	A768MS277M1VLAV022	10 × 12.4
35	40.25	330	22	2,200	2,310	10 × 12.2	A768MS337M1VLA(1)022	A768MS337M1VLAV022	10 × 12.4
40	46.00	33	45	1,150	264	6.3 × 5.7	A768EB336M1GLA(1)045	A768EB336M1GLAV045	6.3 × 5.9
40	46.00	39	45	1,150	312	6.3 × 5.7	A768EB396M1GLA(1)045	A768EB396M1GLAV045	6.3 × 5.9
40	46.00	68	38	1,350	544	8 × 6.7	A768KE686M1GLA(1)038	-	-
40	46.00	82	38	1,350	656	8 × 6.7	A768KE826M1GLA(1)038	-	-
40	46.00	150	25	1,950	1,200	8 × 12.2	A768KS157M1GLA(1)025	A768KS157M1GLAV025	8 × 12.4
40	46.00	220	22	2,200	1,760	10 × 12.2	A768MS227M1GLA(1)022	A768MS227M1GLAV022	10 × 12.4
40	46.00	270	22	2,200	2,160	10 × 12.2	A768MS277M1GLA(1)022	A768MS277M1GLAV022	10 × 12.4
50	57.50	18	48	1,100	180	6.3 × 5.7	A768EB186M1HLA(1)048	A768EB186M1HLAV048	6.3 × 5.9
50	57.50	22	48	1,100	220	6.3 × 5.7	A768EB226M1HLA(1)048	A768EB226M1HLAV048	6.3 × 5.9
50	57.50	33	42	1,300	330	8 × 6.7	A768KE336M1HLA(1)042	-	-
50	57.50	39	42	1,300	390	8 × 6.7	A768KE396M1HLA(1)042	-	-
50	57.50	82	20	1,900	820	8 × 12.2	A768KS826M1HLA(1)020	A768KS826M1HLAV020	8 × 12.4
50	57.50	100	24	2,150	1,000	10 × 12.2	A768MS107M1HLA(1)024	A768MS107M1HLAV024	10 × 12.4
50	57.50	100	30	1,900	1,000	8 × 12.2	A768KS107M1HLA(1)030	A768KS107M1HLAV030	8 × 12.4
50	57.50	120	24	2,150	1,200	10 × 12.2	A768MS127M1HLA(1)024	A768MS127M1HLAV024	10 × 12.4
50	57.50	150	24	2,150	1,500	10 × 12.2	A768MS157M1HLA(1)024	A768MS157M1HLAV024	10 × 12.4
63	72.45	22	54	1,175	277	8 × 6.7	A768KE226M1JLA(1)054	-	-
63	72.45	27	54	1,175	340	8 × 6.7	A768KE276M1JLA(1)054	-	-
63	72.45	47	31	1,800	592	8 × 12.2	A768KS476M1JLA(1)031	A768KS476M1JLAV031	8 × 12.4
63	72.45	56	31	1,800	706	8 × 12.2	A768KS566M1JLA(1)031	A768KS566M1JLAV031	8 × 12.4
63	72.45	82	27	2,000	1,033	10 × 12.2	A768MS826M1JLA(1)027	A768MS826M1JLAV027	10 × 12.4
63	72.45	100	27	2,000	1,260	10 × 12.2	A768MS107M1JLA(1)027	A768MS107M1JLAV027	10 × 12.4
80	92.00	33	38	1,600	528	8 × 12.2	A768KS336M1KLA(1)038*	A768KS336M1KLAV038*	8 × 12.4
80	92.00	39	38	1,600	624	8 × 12.2	A768KS396M1KLA(1)038*	A768KS396M1KLAV038*	8 × 12.4
80	92.00	47	34	1,800	752	10 × 12.2	A768MS476M1KLA(1)034*	A768MS476M1KLAV034*	10 × 12.4
80	92.00	56	34	1,800	896	10 × 12.2	A768MS566M1KLA(1)034*	A768MS566M1KLAV034*	10 × 12.4
(VDC)	(VDC)	120 Hz 20°C (µF)	100 kHz 20°C (mΩ)	100 kHz 125°C (mA)	20°C 2 min (µA)	D x L (mm)	() Represents Part Number Options	Anti-Vibration Version	D x L (mm) Anti-Vibration
Rated Voltage	Surge Voltage	Rated Capacitance	ESR	Ripple Current	Leakage Current	Case Size	KEMET Part Number		Case Size

(1)Electrical Parameters code. See Part Number System for available options.
**AEC-Q200 Available Upon Request for 80 V*

Installing

Solid Polymer Aluminum Capacitors are prone to a change in leakage current due to thermal stress during soldering. The leakage current may increase after soldering or reflow soldering. Therefore, verify the suitability for use in circuits sensitive to leakage current.

A general principle is that lower temperature operation results in a longer, useful life of the capacitor. For this reason, it should be ensured that electrolytic capacitors are placed away from heat-emitting components. Adequate space should be allowed between components for cooling air to circulate, especially when high ripple current loads are applied. In any case, the maximum rated temperature must not be exceeded.

- Do not deform the case of capacitors or use capacitors with a deformed case.
- Verify that the connections of the capacitors are able to insert on the board without excessive mechanical force. Excessive force during insertion, as well as after soldering may cause terminal damage and affect the electrical performance.
- Ensure electrical insulation between the capacitor case, negative terminal, positive terminal and PCB.
- If the capacitors require mounting through additional means, the recommended mounting accessories shall be used.
- Verify the correct polarization of the capacitor on the board.

KEMET recommends, to ensure that the voltage across each capacitor does not exceed its rated voltage.

Temperature Stability Characteristics

Stable characteristics in a very low temperature range allows for less circuits in the design.

Due to a solid polymer electrolyte, Solid Polymer Aluminum Capacitors feature higher conductivity. This results in a lower ESR which, coupled with high capacitance allows an aluminum polymer capacitor to replace several standard electrolytic capacitors, reducing the number of components and maximizing board space.

The ESR of polymer capacitors is nearly constant within its operating temperature range, while the ESR of a standard electrolytic capacitor noticeably changes with temperature.

Temperature Stability Characteristics

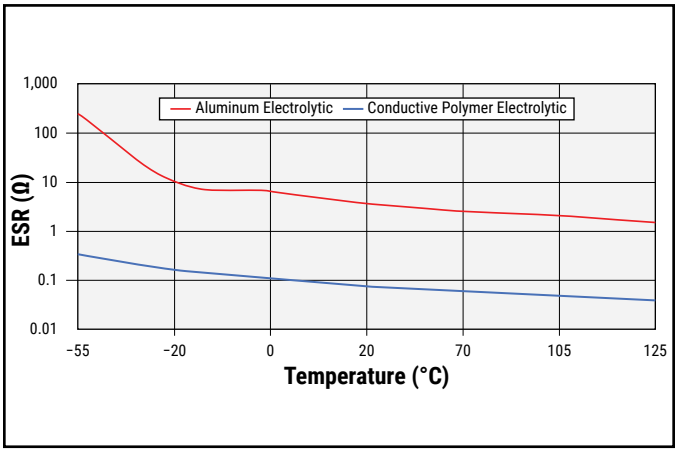

Stability of ESR across Frequency Range

Due to a solid polymer electrolyte, the ESR curve of a solid polymer aluminum capacitor, is lower and more stable than that of a standard electrolytic capacitor.

Stable ESR Values across Frequency

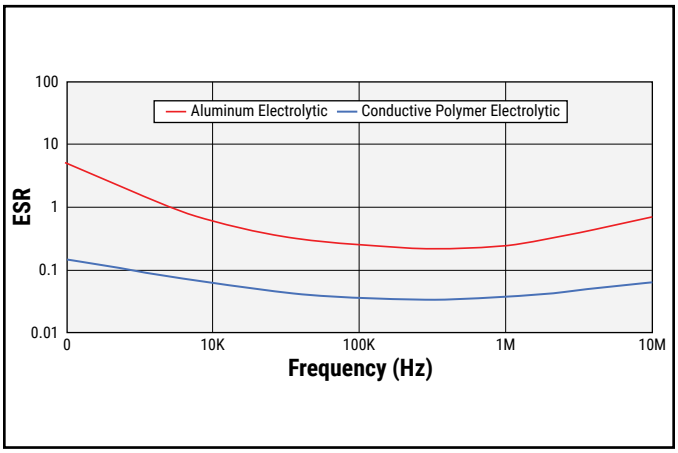

High Resistance to Ripple Current

As a result of a lower ESR, solid polymer aluminum capacitors are able to withstand higher ripple currents during normal operation.

Allowable Ripple Current (100 kHz 105°C)

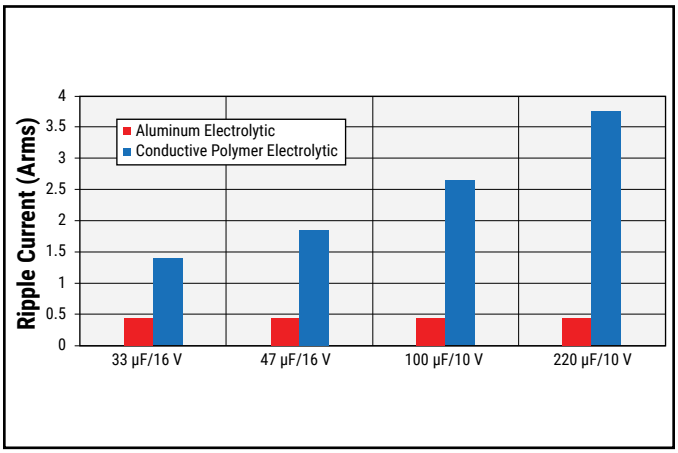

Landing Pad – Millimeters

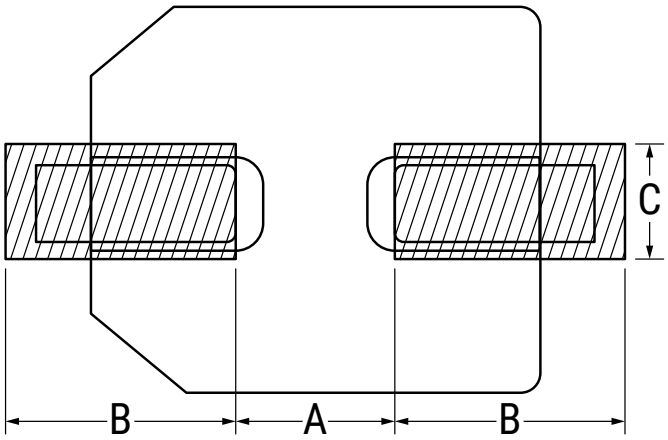

Diameter	A	B	C
5	1.4	3	1.6
6.3	1.9	3.5	1.6
6.3 (Anti-Vibration)	1.9	3.5	3
8	3.1	4.2	2.2
8 (Anti-Vibration)	3.1	4.2	4.2
10	4.5	4.4	2.2

Marking

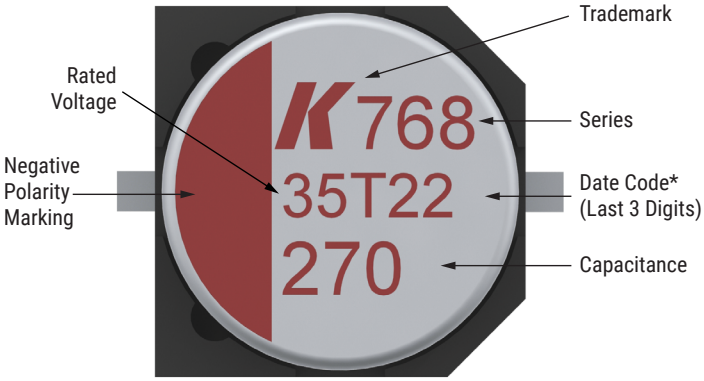

Date Code*	
1st Digits = Rated Voltage	
Letter = Year Code	S = 2019
Final Digits = Week of the Year	01 = 1st week of the Year to 52 = 52nd week of the Year
Year Code	
S	2019
T	2020
U	2021
V	2022
W	2023
X	2024
Y	2025
Z	2026

Construction

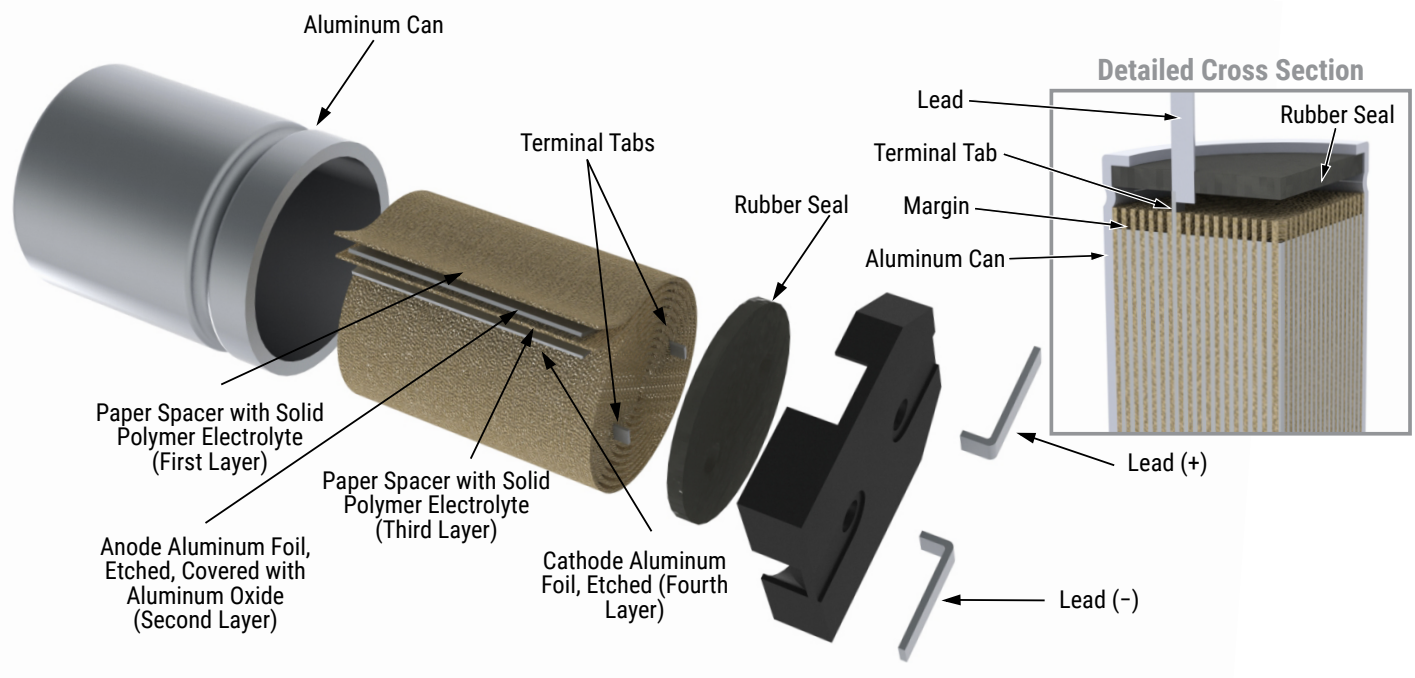

Re-Flow Soldering

The soldering conditions should be within the specified conditions below:

- Do not dip the capacitors body into the melted solder.
- Flux should only be applied to the capacitors terminals.
- Vapour heat transfer systems are not recommended. The system should be thermal, such as infra-red radiation or hot blast.
- Observe the soldering conditions as shown below.
- Do not exceed these limits and avoid repeated reflowing.

Time Period	Preheat t_s	t_L	t_d	t_p	Reflow Number
Temperature (°C)	150 – 180	≥ 217	≥ 230	260	1
				250	1 or 2
Time (seconds)	60 - 120	≤ 50	≤ 40	≤ 5	–

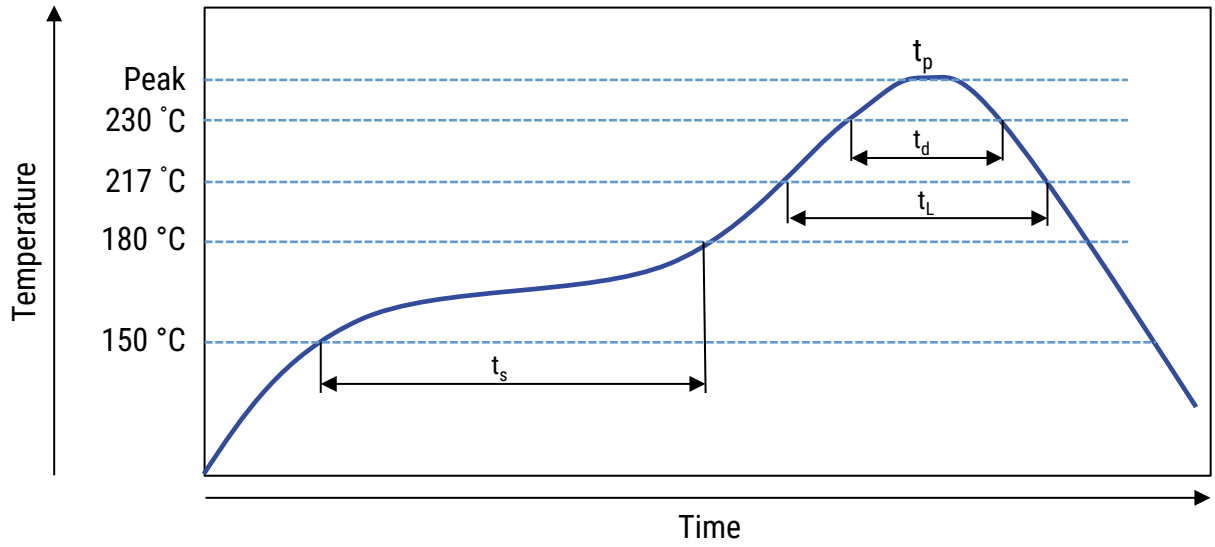

Lead Taping & Packaging

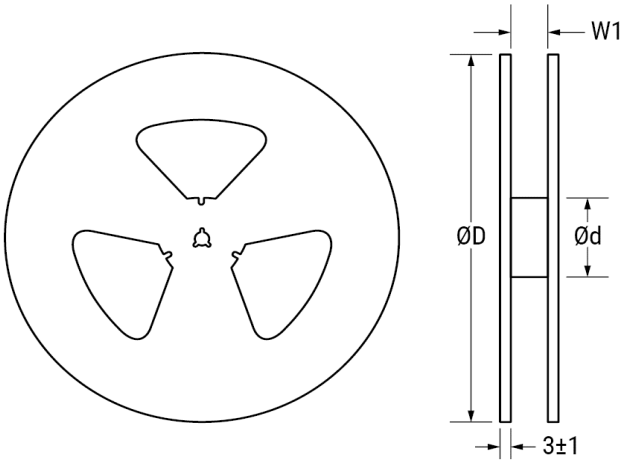

Size Code	Diameter (mm)	Length (mm)	Reel Quantity/SPQ	Box Quantity	Reel		
					d (mm)	D (mm)	W1 (mm)
					±3	±2	±2
BC	5	6	1,000	10,000	100	380	12
BG	5	7	1,000	10,000	100	380	12
EB	6.3	5.7	1,000	10,000	100	380	16
EG	6.3	7	1,000	10,000	100	380	16
EK	6.3	8	1,000	10,000	100	380	16
EN	6.3	9.7	800	8,000	100	380	16
KE	8	6.7	1,000	6,000	100	380	24
KG	8	7	1,000	6,000	100	380	24
KH	8	7.5	500	3,000	100	380	24
KN	8	9.7	500	3,000	100	380	24
KS	8	12.2	400	2,400	100	380	24
KS (Anti-Vibration)	8	12.4	400	2,400	100	380	24
MN	10	10.2	500	3,000	100	380	24
MN (Anti-Vibration)	10	10.4	500	3,000	100	380	24
MS	10	12.2	400	2,400	100	380	24
MU	10	12.6	400	2,400	100	380	24
MS (Anti-Vibration)	10	12.4	400	2,400	100	380	24

Taping for Automatic Insertion Machines

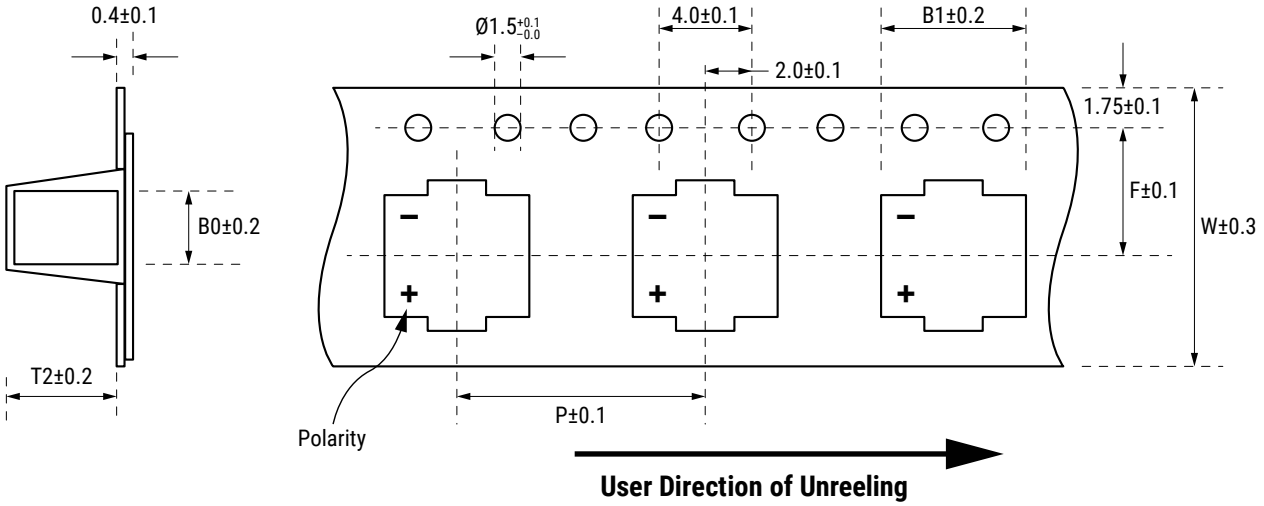

Size Code	Diameter	Length	W	P	F	B1	B0	T2
	(mm)	(mm)	±0.3	±0.1	±0.1	±0.2	±0.2	±0.2
BC	5.0	6.0	16.0	12.0	7.5	5.6	5.6	7.1
BG	5.0	7.0	16.0	12.0	7.5	5.6	5.6	7.1
EB	6.3	5.7	16.0	12.0	7.5	7.0	7.0	5.8
EG	6.3	7.0	16.0	12.0	7.5	7.0	7.0	7.6
EK	6.3	8.0	16.0	12.0	7.5	7.0	7.0	7.6
EN	6.3	9.7	16.0	12.0	7.5	7.0	7.0	9.8
KE	8.0	6.7	24.0	12.0	11.5	8.7	8.7	6.8
KG	8.0	7.0	24.0	12.0	11.5	8.7	8.7	6.8
KH	8.0	7.5	24.0	12.0	11.5	8.6	8.6	8.4
KN	8.0	9.7	24.0	16.0	11.5	8.7	8.7	9.8
KS	8.0	12.2	24.0	16.0	11.5	8.7	8.7	12.6
KS (Anti-Vibration)	8.0	12.4	24.0	16.0	11.5	8.7	9.2	12.8
MN	10.0	10.0	24.0	16.0	11.5	10.7	10.7	10.1
MN (Anti-Vibration)	10.0	10.4	24.0	16.0	11.5	10.7	11.2	10.3
MS	10.0	12.2	24.0	16.0	11.5	10.7	10.7	12.5
MS (Anti-Vbration)	10.0	12.4	24.0	16.0	11.5	10.7	11.2	12.7
MU	10.0	12.6	24.0	16.0	11.5	10.7	10.7	13.1

Construction Data

The manufacturing process begins with the anode foil being electrochemically etched to increase the surface area and then 'formed' to produce the aluminum oxide layer. Both the anode and cathode foils are then interleaved with absorbent paper and wound into a cylinder. During the winding process, aluminum tabs are attached to each foil to provide the electrical contact.

The deck, complete with terminals, is attached to the tabs and then folded down to rest on top of the winding. The complete winding is impregnated with a conductive polymer electrolyte before being housed in a suitable container, usually an aluminum can, and sealed. Throughout the process, all materials inside the housing must be maintained at the highest purity and be compatible with the electrolyte.

Each capacitor is aged and tested before being packed. The purpose of aging is to repair any damage in the oxide layer and thus reduce the leakage current to a very low level. Aging is normally carried out at the rated temperature of the capacitor and is accomplished by applying voltage to the device while carefully controlling the supply current. The process may take several hours to complete. Damage to the oxide layer can occur due to variety of reasons:

- Slitting of the anode foil after forming
- Attaching the tabs to the anode foil
- Minor mechanical damage caused during winding

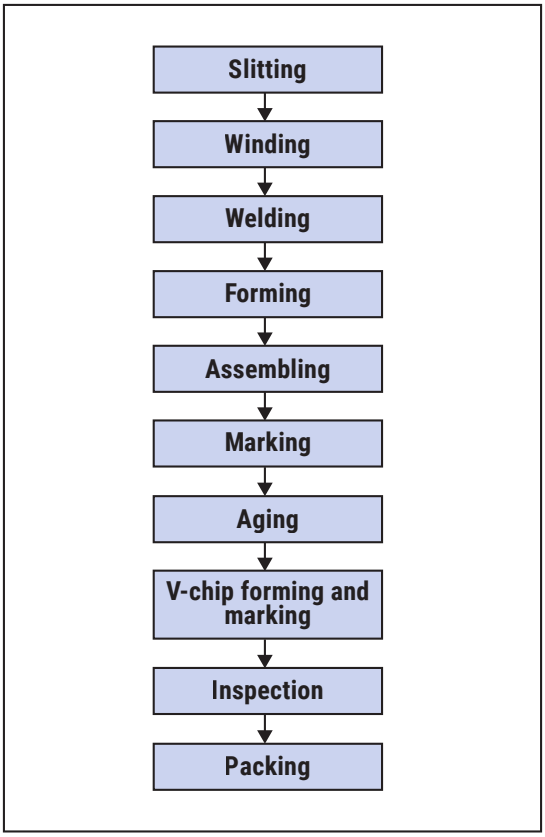

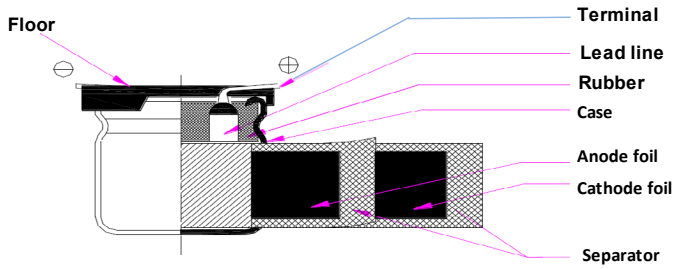

Product Safety

THESE NOTES SHOULD BE READ IN CONJUNCTION WITH THE PRODUCT DATA SHEET. FAILURE TO OBSERVE THE RATINGS AND THE INFORMATION ON THIS SHEET MAY RESULT IN A SAFETY HAZARD.

Warning

When potential lethal voltages e.g. 30 VAC (RMS) or 60 VDC are applied to the terminals of this product, the use of a hazard warning label is recommended.

1. Electrolyte

Conductive polymer aluminum solid electrolytic capacitors contain polymers (electrolytes) which can be hazardous.

1.1 Safety Precautions

In the event of gas venting, avoid contact and inhalation. Wash the affected area with hot water. Use rubber gloves to avoid skin contact. Any contact with the eyes should be liberally irrigated with water and medical advice sought.

2. Intrinsic Properties

2.1 Operating

DC capacitors are polar devices and will operate safely only if correctly connected. Reversing the connections will result in high leakage currents which could subsequently cause short circuit failure and possibly explosion and fire. Correctly polarized operation may result in the above failure modes if:

- The surge voltage is exceeded
- The ambient temperature is too high
- Excessive ripple currents are applied

2.2 Non-Operating

Excessive torque or soldering heat may affect the performance of the capacitor or damage the sealing. Electric shock may result if capacitors are not discharged.

3. Disposal

Aluminum electrolytic capacitors are consignable waste under the Special Waste Regulations 1996 (Statutory Instrument 1996 No 972), which complies with the EC Hazardous Waste Directive – Directive 91/689/EEC. The electrolyte should therefore be treated as a hazardous waste and advice should be sought from the local office of the Environmental Agency regarding its disposal.

Due to the construction of an aluminum electrolytic capacitors, high temperature incineration may cause the component to explode due to build-up of internal pressure. In addition, incineration may also cause the emission of noxious fumes. KEMET strongly recommends that if there are any doubts regarding the disposal of conductive polymer aluminum solid electrolytic capacitors, that advice be sought from the local regulating authority.

In addition, KEMET would like to request that users of aluminum electrolytic capacitors respect the needs of the environment and, wherever possible, recover as much of the materials as possible, i.e., aluminum.

Product Safety cont.

4. Unsafe Use
Most failures are of a passive nature and do not represent a safety hazard. A hazard may, however, arise if this failure causes a dangerous malfunction of the equipment in which the capacitor is employed. Circuits should be designed to fail safe under the normal modes of failure.
The usual failure mode is an increase in leakage current or short circuit. Other possible modes are decrease of capacitance, increase in dissipation factor (and impedance) or an open circuit. Capacitors should be used in a well-ventilated enclosure or cabinet.

5. Fumigation
In many countries throughout the world it is now common practice to fumigate shipments of products in order to control insect infestation, particularly when wooden packaging is used. Currently, methyl bromide is widely used as a fumigant, which can penetrate cardboard packing and polymer bags and, therefore, come into direct contact with equipment or components contained within.

If aluminum electrolytic capacitors become exposed to methyl bromide then corrosion may occur, depending upon the concentration and exposure time to the chemical.

This failure mode can affect all types of KEMET aluminum electrolytic capacitors. Methyl bromide can penetrate the seals of aluminum electrolytic capacitors and cause internal corrosion of the anode connection, resulting in the component becoming open circuit. The rate of corrosion will depend upon the level of exposure to methyl bromide as well as the subsequent operating conditions, such as voltage and temperature. It may take months or, in some cases, several years before the component becomes open circuit.

6. Dielectric Absorption
A phenomenon known as dielectric absorption can cause aluminum electrolytic capacitors to recharge themselves. The phenomenon is well known but impossible to predict with any great accuracy, so potentially any electrolytic product could be affected. Thus, a capacitor that has been charged and then completely discharged will appear to recharge itself if left open circuit; this will manifest itself as a small voltage across the terminals of the capacitor. Generally, the voltages seen are less than 20 VDC. However, higher voltages have on occasion been reported.

In order to avoid any problems caused by this voltage, KEMET recommends that capacitors be discharged before connecting to the terminals.

KEMET Electronics Corporation Sales Offices

For a complete list of our global sales offices, please visit https://www.yageogroup.com/SalesResources/SalesOffices

Disclaimer

YAGEO Corporation and its affiliates do not recommend the use of commercial or automotive grade products for high reliability applications or manned space flight.

All product specifications, statements, information and data (collectively, the "Information") in this datasheet are subject to change. The customer is responsible for checking and verifying the extent to which the Information contained in this publication is applicable to an order at the time the order is placed. All Information given herein is believed to be accurate and reliable, but it is presented without guarantee, warranty, or responsibility of any kind, expressed or implied.

Statements of suitability for certain applications are based on KEMET Electronics Corporation's ("KEMET") knowledge of typical operating conditions for such applications, but are not intended to constitute – and KEMET specifically disclaims – any warranty concerning suitability for a specific customer application or use. The Information is intended for use only by customers who have the requisite experience and capability to determine the correct products for their application. Any technical advice inferred from this Information or otherwise provided by KEMET with reference to the use of KEMET's products is given gratis, and KEMET assumes no obligation or liability for the advice given or results obtained.

Although KEMET designs and manufactures its products to the most stringent quality and safety standards, given the current state of the art, isolated component failures may still occur. Accordingly, customer applications which require a high degree of reliability or safety should employ suitable designs or other safeguards (such as installation of protective circuitry or redundancies) in order to ensure that the failure of an electrical component does not result in a risk of personal injury or property damage.

Although all product–related warnings, cautions and notes must be observed, the customer should not assume that all safety measures are indicated or that other measures may not be required.

KEMET requires its products to be packaged and shipped on pallets. This is because KEMET's products are specifically designed to be packed onto pallets during shipment. If for any reason, the products are removed from pallets by the shipping party and shipped to the end customer, then additional external protection is required. In this instance, an external box with two carton layers and an upwards orientation sticker must be used by the shipping party, with the empty space filled with filling material, and afterwards sealing the box. If this packing and packaging guideline is not followed by the shipping party, the shipping party, and not KEMET, will be held responsible for any packaging, packing and/or product damages upon delivery of the products to the end customer. KEMET hereby disclaims any liability for damages to the products or otherwise that have been, or threaten to be, inflicted, result from or are in any way related to the packaging, packing or damage by the shipping party in contravention of the packing and packaging guidelines herein.

KEMET is a registered trademark of KEMET Electronics Corporation.